SOUTH ELEVATION (PARCEL 7) 3/16"=1'-0" 1

NORTH ELEVATION (PARCEL 7) 3/16"=1'-0" 2

KEYED NOTES

1 EXTERIOR STUCCO TO BE PAINTED
2 TRELLIS
3 PREFINISHED METAL CANOPY
4 CITY SCAPES INLINE WALL MOUNTED TRELLIS – CITY BROWN
5 DRIVE THRU PICK UP WINDOW
6 EXTERIOR WALL CYLINDER – KICHER – 92646A – BRONZE
7 SERVICE & SECONDARY EGRESS DOOR
8 SURVEILLANCE CAMERA
9 EMERGENCY EGRESS LIGHT
10 EGRESS DOOR
11 SPANDREL STOREFRONT (FAUX WINDOWS)
12 INTERNAL DOWNSPOUT FOR PRIMARY DRAIN
13 HVAC EQUIPMENT

EXTERIOR COLORS & FINISHES

A SHERWIN WILLIAMS PAINT #SW 6385 – NAPERY
B SHERWIN WILLIAMS PAINT #SW 9023 – DAKOTA WHEAT
C SHERWIN WILLIAMS PAINT #SW 9092 – CED MOCHA
D ANODIZED ALUMINUM STOREFRONT SYSTEM #40 DARK BRONZE AA-M10C21M44
E TESORO COTO TILE & STONE COTTO EXTERIOR FINISH SPACE CODCOTTC20X20CXT
F SPANISH TILE ROOF
G SHERWIN WILLIAMS PAINT #SW 7032 – WARM STONE
H SHERWIN WILLIAMS PAINT #SW 7034 – STATUS BRONZE
I VINTAGE RANCH DOVERWOOD EL CORADO STONE

Rev. #	Date	Description

6000-6300 VAN BUREN BLVD.
RIVERSIDE, CA 92503

EXTERIOR ELEVATION (PARCEL 7)

Job #: M - 1075
Date: 08/26/22
Scale: AS NOTED
Drawn By: SPD

ELEV

WEST ELEVATION (PARCEL 7) 1/4"=1'-0" 1

EAST ELEVATION (PARCEL 7) 1/4"=1'-0" 2

KEYED NOTES

1. EXTERIOR STUCCO TO BE PAINTED
2. TRELLIS
3. PREFINISHED METAL CANOPY
4. CITY SCAPES INLINE WALL MOUNTED TRELLIS – CITY BROWN
5. DRIVE THRU PICK UP WINDOW
6. EXTERIOR WALL CYLINDER – KICHER – 92646A – BRONZE
7. SERVICE & SECONDARY EGRESS DOOR
8. SURVEILLANCE CAMERA
9. EMERGENCY EGRESS LIGHT
10. EGRESS DOOR
11. SPANDREL STOREFRONT (FAUX WINDOWS)
12. INTERNAL DOWNSPOUT FOR PRIMARY DRAIN
13. HVAC EQUIPMENT

EXTERIOR COLORS & FINISHES

- A – SHERWIN WILLIAMS PAINT #SW 6385 – NAPERY
- B – SHERWIN WILLIAMS PAINT #SW 9023 – DAKOTA WHEAT
- C – SHERWIN WILLIAMS PAINT #SW 9092 – ICED MOCHA
- D – ANODIZED ALUMINUM STOREFRONT SYSTEM #40 DARK BRONZE AA-M10C21A44
- E – TESORO COTO TILE & STONE COTTO EXTERIOR FINISH SPACE CODCOTTO20X20EXT
- F – SPANISH TILE ROOF
- G – SHERWIN WILLIAMS PAINT #SW 7032 – WARM STONE
- H – SHERWIN WILLIAMS PAINT #SW 7034 – STATUS BRONZE
- I – VINTAGE RANCH DOVERWOOD ELDORADO STONE

SHERWIN WILLIAMS PAINT #SW 6385 – NAPERY

SHERWIN WILLIAMS PAINT #SW 9023 – DAKOTA WHEAT

SHERWIN WILLIAMS PAINT #SW 9092 – ICED MOCHA

TESORO COTTO TILE & STONE COTTO EXTERIOR FINISH CODCOTTO20X20EXT

SHERWIN WILLIAMS PAINT #SW 7034 – STATUS BRONZE

SHERWIN WILLIAMS PAINT #SW 7032 – WARM STONE

SPANISH TILE ROOF

VINTAGE RANCH DOVERWOOD ELDORADO STONE

Rev. #	Date	Description

6000-6300 VAN BUREN BLVD.
RIVERSIDE, CA 92503

EXTERIOR ELEVATION (PARCEL 7)

Job #: M - 1075
Date: 08/26/22
Scale: AS NOTED
Drawn By: SPD

ELEV

TRASH ENCLOSURE WEST 3/8"=1' 3

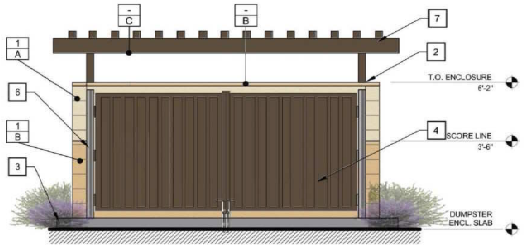

TRASH ENCLOSURE NORTH 3/8"=1' 2

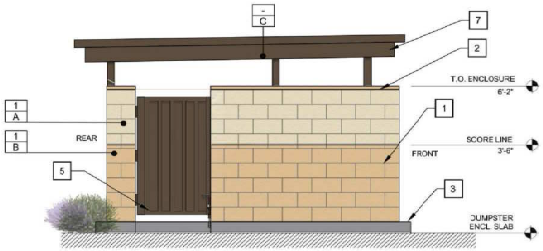

TRASH ENCLOSURE EAST 3/8"=1' 5

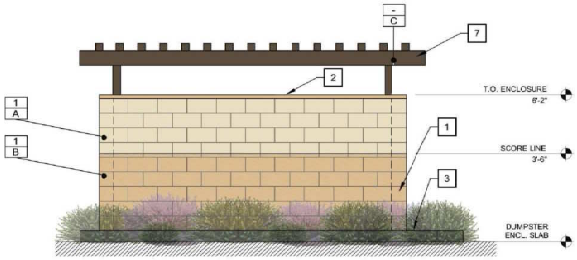

TRASH ENCLOSURE SOUTH 3/8"=1' 4

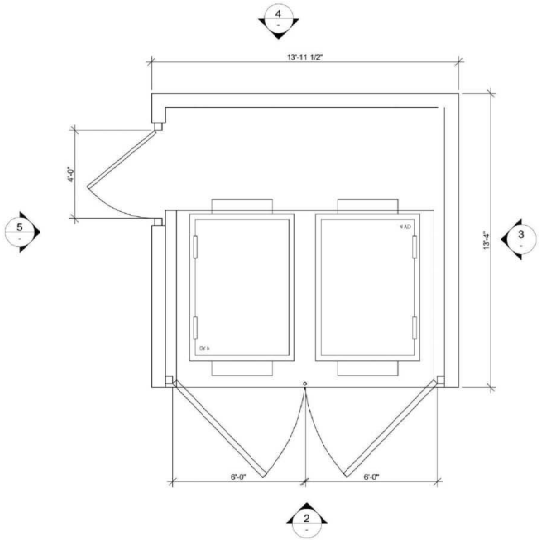

PARCEL 7 TRASH ENCLOSURE PLAN VIEW 3/8"=1' 1

KEYED NOTES

1. 8"X8"X16 – MASONRY WALL
2. 2" CONCRETE CAP
3. 6" PCC FOUNDATION, EXTENDING 6" BEYOND ENCLOSURE WALLS, OVER 90% COMPACTED BASE. WITH A MIN. SLOPE OF 2" TO DRAIN ENCLOSURE.
4. 18 GA. METAL GATES AND STEEL MINI V-BEAM PANEL. HUNG ON 3" STEEL PIPES.
5. 4' ACCESS OPENING
6. 4"X4"" STEEL PIPE
7. 4"X4"" STEEL TRELLIS

EXTERIOR COLORS & FINISHES

- A SHERWIN WILLIAMS PAINT #SW 6386 – NAPERY
- B SHERWIN WILLIAMS PAINT #SW 9023 – DAKOTA WHEAT
- C SHERWIN WILLIAMS PAINT #SW 7034 – STATUS BRONZE

SHERWIN WILLIAMS PAINT #SW 6386 – NAPERY

SHERWIN WILLIAMS PAINT #SW 9023 – DAKOTA WHEAT

SHERWIN WILLIAMS PAINT #SW 7034 – STATUS BRONZE

Rev #	Date	Description

6008-6390 VAN BUREN BLVD.
RIVERSIDE, CA 92503

TRASH ENCLOSURE (PARCEL 7)

Job #: M - 1075
Scale: 08/16/22
Date: AS NOTED
Drawn By: SPD

TE

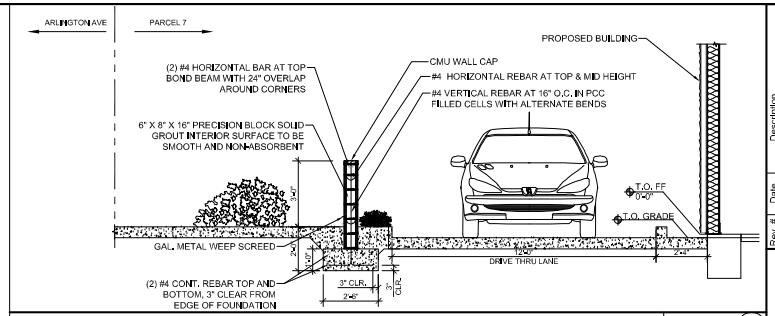

WALL SECTION (PARCEL 7) 3/8"=1' 1

Rev. #	Date	Description

6008-6390 VAN BUREN BLVD.
RIVERSIDE, CA 92503

WALL SECTION (PARCEL 7)

Job #: M - 1075
Date: 05/10/22
Scale: AS NOTED
Drawn By: SPD

WS7

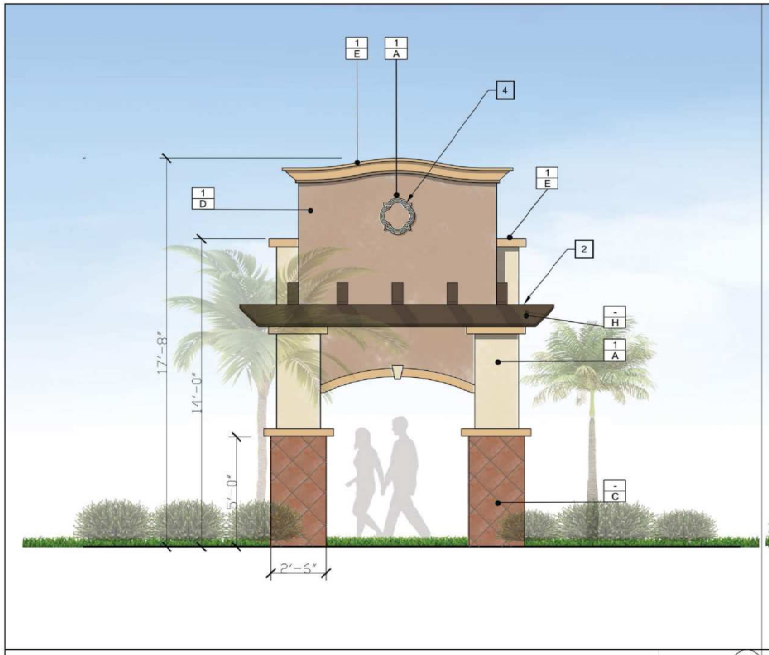

WEST ELEVATION 3/8"=1' 3

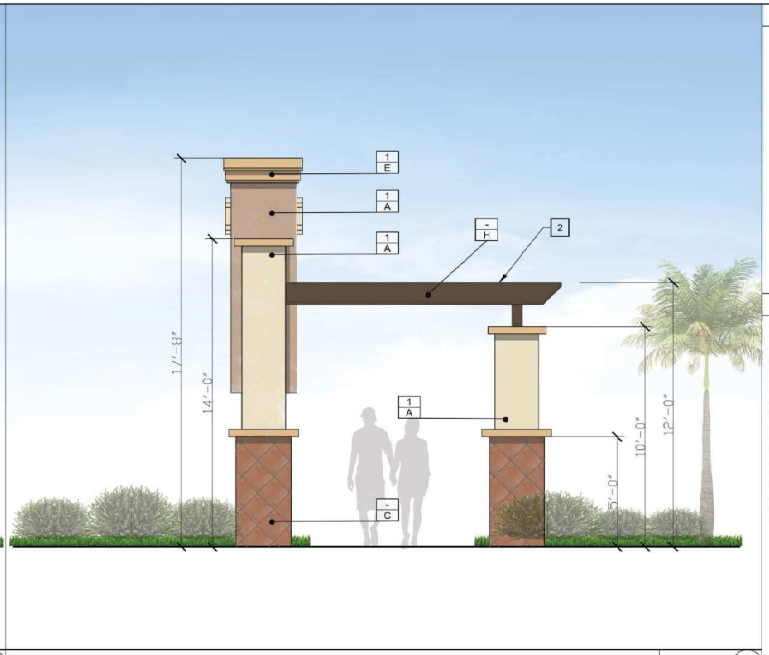

NORTH ELEVATION 3/8"=1' 2

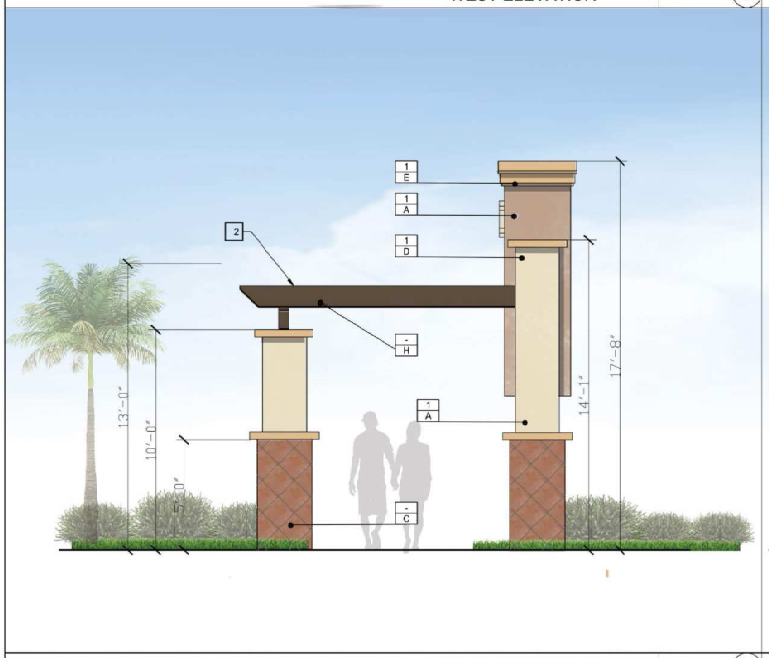

SOUTH ELEVATION 3/8"=1' 3

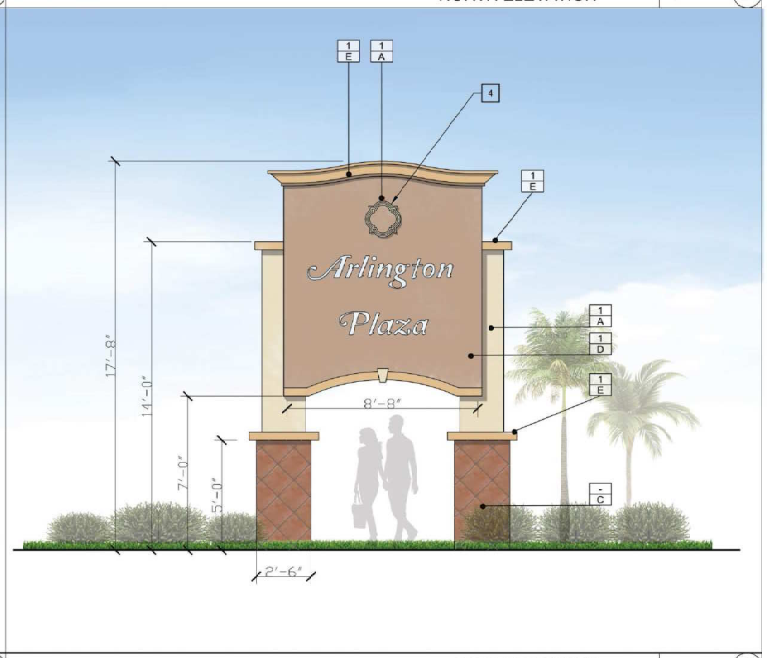

EAST ELEVATION 3/8"=1' 1

KEYED NOTES

1. EXTERIOR STUCCO TO BE PAINTED
2. TRELLIS
3. PLAZA LOGO (REPLICATE THE SAME FONT AS THE EXISTING MONUMENT SIGN)
4. MEDALLION

EXTERIOR COLORS & FINISHES

- A — SHERWIN WILLIAMS PAINT #SW 6386 – NAPERY
- B — SHERWIN WILLIAMS PAINT #SW 7032 – WARM STONE
- C — TESORO COTTO TILE & STONE COTTO EXTERIOR FINISH SPACE COTCOTTO20X20EXT
- D — SHERWIN WILLIAMS PAINT #SW 9092 – ICED MOCHA
- E — SHERWIN WILLIAMS PAINT #SW 9023 – DAKOTA WHEAT
- H — SHERWIN WILLIAMS PAINT #SW 7034 – STATUS BRONZE

Rev. #	Date	Description

6009-6390 VAN BUREN BLVD.
RIVERSIDE, CA 92503

MONUMENT SIGN (PARCEL 7)

Job #:	M - 1075
Scale:	08/24/22
Date:	AS NOTED
Drawn By:	SPD

MS1

MONUMENT RENDERING N.T.S. 1

Rev. #	Date	Description

6008-6390 VAN BUREN BLVD.
RIVERSIDE, CA 92503

MONUMENT RENDERING (PARCEL 7)

Job #:	M - 1075
Scale:	08/29/22
Date:	AS NOTED
Drawn By:	SPD

MS1