DESIGN-BUILD AGREEMENT
FOR
DIGESTER 5 REHABILITATION

RFP No. 2222

This Agreement for Construction ("Agreement") is entered into on this _____ day of _____, 20____, by and between the CITY OF RIVERSIDE, a California charter city and a municipal corporation ("City") and Anaergia Technologies, LLC**,** *a Delaware limited liability company*, 705 Palomar Airport Rd, Ste 200, Carlsbad, CA, 92011, State Contractor's License No. 1038691, ("Design-Build Entity"). Hereinafter, the City and the Design-Build Entity may be referred to collectively as the "Parties."

ARTICLE 1 – SCOPE OF WORK AND DESIGN SERVICES

1.1 Scope of Work. Design-Build Entity shall furnish all engineering design, labor, equipment and materials for, and perform the work of Digester 5 Rehabilitation located at 5950 Acorn Street, Riverside, CA, 92504, which is covered in Design-Build Entity's Scope of Work (the "Work").

1.2 Contract Documents. Design-Build Entity shall perform the Work in accordance with the provisions and requirements of the following Contract Documents:

(1) Request for Proposals No. **2222**;

(2) Design-Build Entity's Proposal dated February 3, 2023;

(3) Design-Build Entity's Scope of Work attached hereto as Exhibits "B-1" through "E";

(4) This Agreement, as signed by the Parties, including Exhibit "A" – Workers' Compensation Certification, and all documents, maps, texts and items referred to in the foregoing documents;

(5) Change Orders and other modifications issued after execution of this Agreement;

(6) Permits from the City's Building, Fire, Planning, Public Works and Public Utilities Departments and similar governmental approvals for the Work required by applicable law;

(7) The 2021 Edition of the Standard Specifications for Public Works Construction ("Standard Specifications") written by Public Works Standards, Inc., and any special provisions;

The specific terms and conditions of this Agreement shall control and have precedence over any contradictory or inconsistent terms or conditions included in any of the Contract Documents and shall be controlling in questions of interpretation. The Design-Build Entity's Scope of Work dated May 10, 2024 shall control and have precedence over any contradictory or

inconsistent terms or conditions with the Request for Proposals No. 2222 and/or Design-Build Entity's Proposal dated February 3, 2023.

The Contract Documents are incorporated herein and are intended to be correlative and constitute Design-Build Entity's performance obligations.

1.3. **Project Design**. City does not intend to contract for, pay for, or receive any design services which are in violation of any professional licensing laws, and by execution of this Agreement, Design-Build Entity acknowledges that City has no such intent. It is the intent of the Parties that Design-Build Entity is fully responsible for furnishing the design of the Project, although the appropriately licensed Design Consultant will perform the design services required by the Contract Documents. Nothing in this article shall create a contractual relationship between such persons and the City.

1.4. **Standard of Care**. All design Services to be performed by Design-Build Entity, its design consultant, subcontractors, and their employees identified by the Design-Build Entity or other persons approved by the City shall be performed in an expeditious and professional manner using architects, engineers and other professionals properly licensed and duly qualified in the jurisdiction in which the Project is located. The professional obligations of such persons shall be undertaken and performed in the interest of the Design-Build Entity. All design services performed pursuant to this Agreement shall be performed with the degree of skill and learning ordinarily possessed by architects and engineers in good standing in the community regularly engaged in the design and construction of an improvement such as this Project and must apply that knowledge with the diligence ordinarily exercised by reputable architects and engineers under similar circumstances ("Standard of Care").

1.5 **Interpretation**. In the event of any conflict between any of the Contract Documents, the document highest in the order of precedence shall control. The order of precedence shall be the same as that set forth in Section 3-7.2 of the 2021 Edition of the Standard Specifications for Public Works Construction.

1.6 **Entire Agreement.** This Agreement together with all other Contract Documents represents the entire and integrated agreement between City and Design-Build Entity and supersedes any prior written or oral agreements between them concerning the subject matter contained in the Contract Documents. There are no representations, agreements, arrangements or understandings, oral or written, between the Parties hereto, relating to the subject matter contained in the Contract Documents, which are not fully expressed herein.

ARTICLE 2 – CONTRACT PRICE AND PAYMENT

2.1 **Contract Price.** City shall pay Design-Build Entity the Contract Price of **Nine Million Five Hundred Eight Thousand ($9,508,000)** which includes all California sales or use tax and County and City taxes, in consideration for the Design-Build Entity's full, complete and timely performance of all of the Work required by the Contract Documents. The Contract Price includes any Alternative/Additive Bid Items which were awarded with the Contract.

In accordance with Section 22300 of the California Public Contract Code, Design-Build Entity may substitute securities for any monies withheld by City to ensure performance of the Contract. Such substitution shall be made at the request and expense of Design-Build Entity. Securities equivalent to the amount withheld may be deposited with City or with a state or federally chartered bank as escrow agent. Securities eligible for substitution shall include those listed in Section 16430 of the Government Code, bank or saving and loan certificates of deposit, interest bearing demand deposit accounts, standby letters of credit, or any other security mutually agreed to by Design-Build Entity and City.

2.2 **Changes to the Contract Price.** Design-Build Entity shall not be compensated for any extra materials used or time expended over and above the Contract Price, unless prior written approval for the same has been granted by the City.

2.3 **Payment Procedures.** Without extending the prompt payment requirements applicable to this project as set forth in California Public Contract Code sections 7107 and 20104.50, within sixty (60) calendar days after City accepts final completion of the work and issues the Notice of Completion, City shall pay Design-Build Entity the amounts City deducted and retained from Design-Build Entity's progress payments, except such sums which are required by applicable law or authorized by the Contract to be further retained. In the event of a dispute between City and Design-Build Entity concerning the amount of final payment due, the City may withhold from final payment, including Liquidated Damages provided forth in the Contract Documents, together with an amount not to exceed 150% of the value of disputed amounts for incomplete or non-conforming work.

ARTICLE 3 – TIME FOR PERFORMANCE

3.1 **Date of Commencement/Notice to Proceed.** The date of commencement of the Work shall be established in a written Notice to Proceed issued by the City. The City will not issue a Notice to Proceed to the Design-Build Entity until this Agreement, bonds and insurance documents have been executed and/or approved by the City.

3.2 **Contract Time.** Design-Build Entity shall perform the Work in a diligent manner and shall complete all of the Work of the Contract, excluding any Plant Establishment, if applicable, within eighteen (18) calendar months after the date specified to Design-Build Entity in the Notice to Proceed issued by City.

ARTICLE 4 – LIQUIDATED DAMAGES

4.1 Amounts of Liquidated Damages.

4.1.1 **Delay in Substantial Completion of the Work**. Failure of Design-Build Entity to complete the Work within the time allowed will result in damages being sustained by City. Such damages are, and will continue to be, impracticable and extremely difficult to determine. For each consecutive calendar day in excess of the time specified for the completion of Work and which delay is caused by Design Build Entity, Design-Build Entity shall pay to City, or have withheld from monies due the Design-Build Entity, the sum of ***Two Hundred Fifty Dollars ($250.00*)**, with

a total maximum of 5% of the Contract Price. Execution of this Agreement shall constitute agreement by City and Design-Build Entity that said sum is the minimum value of the costs and actual damage caused by the failure of Design-Build Entity to complete the Work within the allotted time. Such sum is liquidated damages and shall not be construed as a penalty, and may be deducted from payments due Design-Build Entity if such delay occurs.

ARTICLE 5 – CLAIMS AND DISPUTES

5.1 **Notice of Claims.** Design-Build Entity acknowledges and agrees that its failure to submit any claim arising under this Contract, shall constitute a waiver of Design-Build Entity's right to additional compensation and/or extension of time.

5.2 **Government Code Claims Procedures.** Design-Build Entity further acknowledges that Design-Build Entity must comply with the claims procedures set forth in Government Code sections 900 et seq. prior to filing a lawsuit against the City for any such claim. Failure to submit a Government Code claim shall bar Design-Build Entity from bringing and maintaining a valid lawsuit against the City.

ARTICLE 6 – LOCAL BUSINESS LICENSE, TAXES AND FEES

6.1 **Business Tax Certificate and Governmental Approvals.** As a condition of the Agreement, Design-Build Entity and all subcontractors shall, during the term of this Agreement, secure and annually renew business tax certificates pursuant to Chapter 5.04 of the Riverside Municipal Code to operate in the City of Riverside, and shall also secure and maintain at all times during performance of the Work, any other licenses, fees, permits or similar Governmental Approvals required by Applicable law.

6.2 **Offsets.** Design-Build Entity acknowledges and agrees that with respect to any debt which is rightfully owed, or which becomes owed, by Design-Build Entity to City, City reserves the right to withhold and offset said amounts from any payments, refunds or reimbursements owed by City to Design-Build Entity under the Agreement. Notice of such withholding and offset shall promptly be given to Design-Build Entity by City in writing. Without waiving any prompt payment requirements under applicable law, in the event of a dispute as to the amount owed or whether such amount is owed to City, City will hold such disputed amount until either the appropriate appeal process has been completed or until the dispute has been resolved.

ARTICLE 7 – BONDS

7.1 **Performance and Payment Bonds.** Prior to City's execution of this Agreement, Design-Build Entity shall furnish to the City two (2) duly executed surety bonds using the forms included herein, one (1) as security for the faithful performance of the Contract and one (1) as security for the payment of all persons performing labor and furnishing materials in connection with the Contract. Both bonds shall be in the amount of one hundred percent (100%) of the Contract Price and shall be subscribed by an Admitted Surety Insurer which is authorized to transact surety insurance business in the State of California with a policy holder's rating of A or higher and a Financial Class of VII or larger. Should any bond or surety become insufficient, Design-Build

Entity shall furnish City a new bond within ten (10) days after receiving notice from City. No payments will be due or paid under the Contract until any and all bond deficiencies have been remedied. Design-Build Entity, by execution of this Agreement acknowledges that the bonds are not Contract Documents, but are separate obligations.

ARTICLE 8 – WORKERS' COMPENSATION INSURANCE

8.1 **Workers' Compensation Insurance Certificate.** By executing this Agreement, Design-Build Entity certifies that Design-Build Entity is aware of and will comply with Section 3700 of the Labor Code of the State of California requiring every employer to be insured against liability for workers' compensation or to undertake self-insurance before commencing any of the Work. Design-Build Entity shall comply with Labor Code Section 1861 by signing and filing the workers' compensation certification attached hereto as Exhibit "A" and incorporated herein by reference.

8.2 **Evidence of Coverage.** Prior to the City's execution of this agreement, Design-Build Entity shall file with the City either 1) a certificate of insurance or self-insurance evidencing that such insurance is in effect, or that Design-Build Entity is self-insured for such coverage; or 2) a certified statement that Design-Build Entity has no employees, and acknowledging that if Design-Build Entity does employ any person, the necessary certificate of insurance will immediately be filed with City. Any Certificate filed with the City shall provide that City shall be given ten (10) days prior written notice before modification or cancellation thereof.

8.3 **Carrier Rating.** Design-Build Entity's workers' compensation insurance carrier shall be authorized to transact insurance business in the State of California with a policy holder's rating of A or higher and a Financial Class of VII or larger.

8.4 **Subcontractor Worker's Compensation Insurance.** Design-Build Entity shall require each of its Subcontractors to obtain and maintain for the duration of this Agreement, complete workers' compensation insurance, meeting or exceeding the coverage's and amounts that California law requires.

ARTICLE 9 – DESIGN-BUILD ENTITY'S LIABILITY INSURANCE

9.1 **Minimum Scope**. Prior to City's execution of this Agreement and Design-Build Entity's commencement of Work, Design-Build Entity shall secure, submit proof of and shall thereafter maintain without interruption, until completion of the Design-Build Entity, such commercial general, automobile liability, professional liability, builders risk and/or installation floater insurance as shall protect Design-Build Entity, its Subcontractors and the Additional Insured's from any and all claims for damages for personal injury, including accidental death, as well as any and all claims for property damage which may arise from or which may concern operations under the Contract, whether such operations be by or on behalf of Design-Build Entity, any subcontractor or anyone directly or indirectly employed by, connected with or acting for or on behalf of any of them.

9.2 **Carrier Ratings**. All liability insurance shall be issued by an insurance company or companies authorized to transact liability insurance business in the State of California with a policy holder's rating of A or higher and a Financial Class of VII or larger.

9.3 **Minimum Limits**. Design-Build Entity shall maintain minimum limits of insurance as follows:

9.3.1 Commercial General Liability: Design-Build Entity's commercial general liability insurance policy shall cover both bodily injury (including death) and property damage (including, but not limited to, premises operations liability, products-completed operations liability, independent contractor's liability, personal injury liability, and contractual liability) in an amount not less than $1,000,000 per occurrence, an aggregate limit for products/completed operations in the amount not less than $2,000,000.

9.3.2 Automobile Liability Insurance: Design-Build Entity's automobile liability policy shall cover both bodily injury and property damage in an amount not less than $1,000,000 per occurrence. All of Design-Build Entity's automobile and/or commercial general liability insurance policies shall cover all vehicles used in connection with Design-Build Entity's performance of this Agreement, which vehicles shall include, but are not limited to, Design-Build Entity owned vehicles, Design-Build Entity leased vehicles, Design-Build Entity's employee vehicles, non-Design-Build Entity-owned vehicles and hired vehicles.

9.3.3. Installation Floater Insurance. Contractor shall obtain, at Contractor's expense, and keep in effect during the term of this Agreement, an Installation Floater for coverage of Contractor's labor, materials and equipment to be used for completion of the work performed under this Agreement. The minimum amount of coverage to be carried shall be equal to the full amount of the Contractor's labor, equipment, materials, or fixtures to be installed, in transit, or stored off-site or on-site during the performance of this Agreement. The policy shall include as loss payee, the City of Riverside, the Contractor, and its sub-contractors as their interest may appear. The City shall not be responsible for the theft of any materials, equipment in the possession and control of Contractor.

9.3.5 Professional Liability.

9.3.5.1 The Design-Build Entity's professional liability policy must 1) Include professional malpractice, errors and omissions; and 2) Provide coverage for claims arising from acts, errors or omissions from professional services performed by or on behalf of Design-Build Entity, its Design Consultants, Subcontractors, or by anyone directly employed by any of them, or by anyone for whose acts any of them may be liable, including liability assumed under and arising from the Agreement. The Design-Build Entity is responsible for collecting professional liability insurance from any of its subcontractor, individual, or consultant which Design-Build Entity hired for the project.

The Design-Build Entity's professional liability policy must provide limits of liability in an amount not less than: one million dollars ($1,000,000) per claim; and two million dollars ($2,000,000) in the aggregate. Design-Build Entity shall be responsible for the full amount of all deductibles/self-insured retention per claim for coverage under the Professional Liability

Insurance policy. These minimum amounts of coverage shall not constitute any limitation or cap on Design-Build Entity's indemnification obligation.

The Design-Build Entity shall require that each Design Consultant maintain professional liability coverage. Each Design-Consultant's professional liability policy must provide coverage for claims arising from the negligent acts, errors or omissions from professional design services performed by Design Consultant, including liability assumed under and arising from the Agreement.

Each Design-Consultant's professional liability policy must provide limits of liability in an amount not less than: one million dollars ($1,000,000) per claim; and two million dollars ($2,000,000) in the aggregate. Design Consultant shall be responsible for the full amount of all deductibles/self-insured retention per claim for coverage under the Professional Liability Insurance policy.

9.4 **Notice of Cancellation and Renewals**. The policies shall not be canceled unless thirty (30) days prior written notification of intended cancellation has been given to City by certified or registered mail (this obligation may be satisfied in the alternative by requiring such notice to be provided by Design-Build Entity's insurance broker and set forth on its Certificate of Insurance provided to City). Design-Build Entity agrees that upon receipt of any notice of cancellation or alteration of the policies, Design-Build Entity shall procure within five (5) days, other policies of insurance similar in all respects to the policy or policies to be cancelled or altered. Design-Build Entity shall furnish to the City copies of any endorsements that are subsequently issued amending coverage or limits within fourteen (14) days of the amendment.

9.5 **All Coverages**. The insurance policy or policies shall also comply with the following provisions:

a. General Liability: Policies shall include premises/operations, products completed operations, independent contractors, owners and contractors' protection, explosion, collapse, underground hazard, broad form contractual, personal injury with employment exclusion deleted, and broad form property damage.

b. The policy shall be endorsed to waive any right of subrogation against the City and its subconsultants, employees, officers, agents and directors for work performed under this Agreement.

c. If policies are written on a claims made basis, the certificate should so specify and the policy must continue in force for **five (5) years** after completion of the Project. The retroactive date of the coverage must also be listed.

d. The policy shall specify that the insurance provided by Design-Build Entity will be considered primary and not contributory to any other insurance available to the City of Riverside. Design-Build Entity shall provide Form No. CG 20010413 or the equivalent to City.

e. All policies of insurance shall name the City as an Additional Insured and shall contain the following language: "Solely with respect to work done by and on behalf of the name insured for the City of Riverside, it is agreed that the City of Riverside, and its officers and employees are added as additional insureds under this policy."

9.6 **Certificates of Insurance, Additional Insured Endorsements and Deductibles**. Prior to execution of the Agreement, and thereafter upon City's request, Design-Build Entity shall furnish City with original certificates of insurance and additional insured endorsements setting forth evidence of all insurance coverage required by this Article. Each certificate and endorsement is to be signed by a person authorized by that insurer to bind coverage on its behalf. The City of Riverside, its City Council and all of its respective officials, officers, directors, employees, managers, commission members, representatives, agents and council members shall be named as additional insured's under each policy.

9.7 **Design-Build Entity's Failure to Provide Required Insurance.** Failure to maintain required insurance at all times shall constitute a default and material breach. In such event, Design-Build Entity shall immediately notify City and cease all performance under this Contract until further directed by the City. In the absence of satisfactory insurance coverage, City may, at its discretion and sole option: (a) procure insurance with collection rights for premiums, attorneys' fees and costs against Design-Build Entity by way of set-off or recoupment from sums due Design-Build Entity; (b) immediately terminate or suspend Design-Build Entity's performance of the Contract; (c) pay Design-Build Entity's premiums for renewal of Design-Build Entity coverage; or (d) self-insure the risk, with all damages and costs incurred, by judgment, settlement or otherwise, including attorneys' fees and costs, being collectible from Design-Build Entity, by way of set-off or recoupment from any sums due Design-Build Entity. Upon demand, Design-Build Entity shall repay City for all sums that City paid to obtain, renew, reinstate or replace the insurance, or City may offset the cost against any monies that the City may owe Design-Build Entity.

9.8 **Verification of Coverage.** City shall have the right to obtain, upon request, the Design-Build Entity's insurance policies (including, but not limited to, the declarations page, form list and riders), endorsements or certificates required under the Design-Build Entity Documents.

9.9 **Reassessment of Insurance Requirements.** At any time during the duration of this Contract, the City may require that Design-Build Entity obtain, pay for, and maintain more or less insurance depending on the City's assessment of any one or more of the following factors, provided that such change will be subject to change order procedures: (1) the City's risk of liability or exposure arising out of, or in any way connected with, Design-Build Entity's services under this Contract; (2) the nature or number of accidents, claims, or lawsuits arising out of, or in any way connected with, Design-Build Entity's services under this Contract; or (3) the availability, or affordability, or both, of increased liability insurance coverage.

9.10 **Design-Build Entity's Insurance for Other Losses.** The Design-Build Entity and its Subcontractors of every tier shall assume full responsibility for all loss or damage from any cause whatsoever to any tools, Design-Build Entity's (or Subcontractors') employee owned tools, machinery, equipment, or motor vehicles owned or rented by the Design-Build Entity, or the

Design-Build Entity's agents, suppliers or Subcontractors as well as to any temporary structures, scaffolding and protective fences.

9.11 **No Limitation.** Design-Build Entity's maintenance of insurance as required by the Contract Documents shall not be construed to limit the liability of the Design-Build Entity's or its Subcontractors of any tier to the coverage provided by such insurance, or otherwise limit the City's recourse to any remedy available at law or in equity.

9.12 **Subcontractors' Insurance.** The Design-Build Entity's shall include in all subcontracts a requirement that the Subcontractors of every tier shall obtain and maintain, at a minimum, all insurance required by Articles 9 and 10 of this Agreement except that the limits of liability and deductibles shall be in amounts determined by the Design-Build Entity, based on the degree of hazardous exposure according to the Work performed by each Subcontractor and the size of each subcontract.

Design-Build Entity's shall ensure that any professional engineer retained on its behalf to provide supplemental plans and engineering calculations required in conjunction with the Work, maintains professional liability insurance during the entire term of this Agreement. Such insurance shall be in the minimum amount of $1,000,000 to protect City from claims resulting from the engineer(s) activities. This minimum amount of coverage shall not constitute any limitation or cap on Design-Build Entity's indemnification obligations set forth herein.

The City reserves the right to request certificates of insurance from the Design-Build Entity for each Subcontractor. The Design-Build Entity acknowledges that regardless of insurance obtained by its Subcontractors, the Design-Build Entity will be responsible to the City for any and all acts of its Subcontractors.

ARTICLE 10 - INDEMNITY/LIMITATION OF LIABILITY

10.1 **Indemnity.**

(a) Design-Build Entity shall defend, indemnify and hold harmless City, its elected and appointed officials, officers, employees, agents and volunteers, from any and all actual or alleged third party claims, demands, causes of action, liability, loss, or damage for personal injury or tangible property damage ("Claims") arising from the acts of the Design-Build Entity, its personnel, employees, agents or subcontractors in connection with the performance of this Agreement. This indemnification will not apply in the event a Claim is caused by the sole negligence or willful misconduct of City or its employees or agents.

(b) City shall indemnify, defend and hold harmless Design-Build Entity and its directors, officers, employees and agents for, from and against any Claims to the extent of any sole negligence or willful misconduct of City in performance of this Agreement. This indemnification will not apply to the extent that a Claim is caused by the negligence or willful misconduct of Design-Build Entity or its employees or agents.

10.2 **Limitation of Liability**. Neither Party shall be liable to the other for lost revenues or consequential, special, or punitive damages. Aside from the obligations set forth in this Agreement for payment of the contract price, and except for claims of personal injury or property damage covered by insurance or involving Design-Build Entity's gross negligence, the total aggregate liability of each Party to the other shall be limited to one million dollars ($1,000,000.00).

10.3 **Subcontractor Requirements.** In addition to the requirements set forth hereinabove, Design-Build Entity shall ensure, by written subcontract agreement, that each of Design-Build Entity's Subcontractors of every tier shall protect, defend, indemnify and hold harmless the Indemnitees with respect to Indemnity Claims arising out of, in connection with, or in any way related to each such Subcontractors' Work on the Project in the same manner in which Design-Build Entity is required to protect, defend, indemnify and hold the Indemnitees harmless. In the event Design-Build Entity fails to obtain such defense and indemnity obligations from others as required herein, Design-Build Entity agrees to be fully responsible to the Indemnitees according to the terms of this Article.

10.4 **No Limitation or Waiver of Rights.** Design-Build Entity's obligations under this Article are in addition to any other rights or remedies which the Indemnitees may have under the law or under the Contract Documents. Design-Build Entity's indemnification and defense obligations set forth in this Article are separate and independent from the insurance provisions set forth in the Agreement and do not limit, in any way, the applicability, scope, or obligations set forth in such insurance provisions. The purchase of insurance by the Design-Build Entity with respect to the obligations required herein shall in no event be construed as fulfillment or discharge of such obligations. In any and all claims against the Indemnitees by any employee of the Design-Build Entity, any Subcontractor, any supplier of the Design-Build Entity or Subcontractors, anyone directly or indirectly employed by any of them, or anyone for whose acts any of them may be liable, the obligations under this Article shall not be limited in any way by any limitation on the amount or type of damages, compensation or benefits payable by or for the Design-Build Entity or any Subcontractor or any supplier of either of them, under workers' or workmen's compensation acts, disability benefit acts or other employee benefit acts. Failure of the City to monitor compliance with these requirements imposes no additional obligations on the City and will in no way act as a waiver of any rights hereunder.

10.5 **Withholding to Secure Obligations.** In the event an Indemnity Claim arises prior to final payment to Design-Build Entity, the City may, in its sole discretion, reserve, retain or apply any monies due Design-Build Entity for the purpose of resolving such Indemnity Claims; provided, however, the City may release such funds if the Design-Build Entity provides the City with reasonable assurances of protection of the Indemnitees' interests. The City shall, in its sole discretion, determine whether such assurances are reasonable.

10.6 **Survival of Indemnity Obligations.** Design-Build Entity's obligations under this Article are binding on Design-Build Entity's and its Subcontractors' successors, heirs and assigns and shall survive the completion of the Work or termination of the Design-Build Entity's performance of the Work.

10.7 **Independent Contractor**. Design-Build Entity shall at all times during its performance of the Work retain its status as an independent contractor. Design-Build Entity's employees and agents shall under no circumstances be considered or held to be employees or agents of City and City shall have no obligation to pay or withhold state or federal taxes or provide workers' compensation or unemployment insurance for or on behalf of Design-Build Entity or its employees and agents.

ARTICLE 11 – PREVAILING WAGES

11.1 **Public Work Project.**

This Project is a public work as defined in California Labor Code Section 1720. Design-Build Entity and all Subcontractors of any tier are required to pay all workers employed in the execution of the Work not less than the general prevailing wage rates of per diem wages and overtime and holiday wages determined by the Director of the Department of Industrial Relations ("DIR") under Section 1720 et seq. of the California Labor Code and implemented by Resolution No. 13346 of the City Council of the City of Riverside. The Director's determination of prevailing rates is available on-line at www.dir.ca.gov/dlsr/DPreWageDetermination.htm and is referred to and made a part hereof; the wage rates therein ascertained, determined and specified are referred to and made a part hereof as though fully set forth herein. Per Senate Bill 854 (2014), Design-Build Entity and subcontractors shall register with the Department of Industrial Relations (DIR) in order to bid and perform public works projects. Design-Build Entity and subcontractors on all public works projects shall submit electronic certified payrolls to the Labor Commissioner and City unless excused from this requirement.

11.2 **California Labor Code.** Design-Build Entity is aware of and stipulates that Design-Build Entity will also comply with the following sections of the California Labor Code:

a. Section 1775 prescribing sanctions for failure to pay prevailing wage rates;
b. Section 1776 requiring the making, keeping and disclosing of detailed payroll records and prescribing sanctions for failure to do so;
c. Section 1777.5 prescribing the terms and conditions for employing registered apprentices;
d. Section 1810 providing that eight hours of labor shall be a day's work; and
e. Section 1813 prescribing sanctions for violations of the provisions concerning eight-hour work days and forty-hour work weeks.
f. Sections 1725.5 and 1771.1 requiring all general contractors and subcontractors to be registered with DIR. Registration can be accomplished through the DIR website by using this link: http://www.dir.ca.gov/Public-Works/PublicWorks.html.

ARTICLE 12 – MISCELLANEOUS

12.1 **Non-Discrimination.** Except as provided in Section 12940 of the California Government Code, during Contractor's performance of the Agreement, Contractor shall not discriminate on the grounds of race, religious creed, color, national origin, ancestry, age, physical disability, mental

disability, medical condition including the medical condition of Acquired Immune Deficiency Syndrome (AIDS) or any condition related thereto, marital status, gender, gender identity, genetic information, gender expression, sex or sexual orientation, military and veteran status, in the selection and retention of employees and subcontractors and the procurement of materials and equipment. Contractor shall also comply with the requirements of the Americans with Disabilities Act in the performance of the Agreement.

12.2 **Notice.** Whenever any provision of the Contract Documents requires the giving of written notice, including notices, bills, invoices or other documents required or permitted under this Agreement, service shall be sufficient if sent by one party to the other by overnight courier, or by registered, certified or United States first class mail, postage prepaid and addressed as follows:

City	Design-Build Entity
City of Riverside Attn: Gilbert Hernandez, Director 3900 Main Street Riverside, CA 92522	Anaergia Technologies, LLC Attn: Legal Department legal@anaergia.com 705 Palomar Airport Road, Suite 200 Carlsbad, CA 92011

12.3 **City's Right to Access and Audit Design-Build Entity's Project Documents.**

12.3.1 If the Design-Build Entity submits a claim to the City for additional compensation, the City shall have the right, as a condition to considering the claim, and as a basis for evaluation of the claim, and until the claim has been settled, to audit the Design-Build Entity's books to the extent they are relevant. This right shall include the right to examine books, records, documents, and other evidence and accounting procedures and practices, sufficient to discover and verify all direct and indirect costs of whatever nature claimed to have been incurred or anticipated to be incurred and for which the claim has been submitted. The right to audit shall include the right to inspect the Design-Build Entity's plant, or such parts thereof, as may be or have been engaged in the performance of the Work. The Design-Build Entity further agrees that the right to audit encompasses all subcontracts and is binding upon subcontractors. The rights to examine and inspect herein provided for shall be exercisable through such representatives as the City deems desirable during the Design-Build Entity's normal business hours at the office of the Design-Build Entity. The Design-Build Entity shall make available to the City for auditing, all relevant accounting records and documents, and other financial data, and upon request, shall submit true copies of requested records to the City.

12.3.2 The City and/or its authorized auditors or representatives, shall have access to and the right to examine, audit, excerpt, transcribe, and reproduce any of the Design-Build Entity's records for a period of at least three (3) years after termination of the Design-Build Entity and/or Final Payment. Such records include without limitation, journals, ledgers, records of accounts payable and receivable, profit and loss statements, bank statements, invoices, receipts, subcontracts, agreements, notes, correspondence, memoranda, and any documents generated and received in Design-Build Entity's performance of this Contract. Upon written notice by the City, Design-Build Entity shall promptly make all such records available to Owner and/or its authorized auditors or representatives and cooperate with the Owner and its

authorized auditors or representatives in examining, auditing, excerpting, transcribing and reproducing the records.

12.4 **Venue.** Any action at law or in equity brought by either of the parties hereto for the purpose of enforcing a right or rights provided for by this Agreement shall be tried in the Superior Court in Riverside County, State of California, and the parties hereby waive all provisions of law providing for a change of venue in such proceedings to any other county.

12.5 **No Estoppel or Waiver by City.** No action or failure to act by the City shall constitute a waiver of any right or duty afforded City under this Agreement, nor shall any such action or failure to act constitute an approval of or acquiescence in any breach thereunder, except as may be specifically provided in this Agreement or as may be otherwise agreed in writing. The waiver by the City of any breach or violation of any term, covenant or condition of this Agreement or of any provision, ordinance, or law shall not be deemed to be a waiver of any other term, covenant, condition, ordinance, or law or of any subsequent breach or violation of the same or of any other term, covenant, condition, ordinance, or law. The subsequent payment of any monies or fee by the City which may become due hereunder shall not be deemed to be a waiver of any preceding breach or violation by Design-Build Entity or any term, covenant, condition of this Agreement or of any applicable law or ordinance.

12.6 **Signature Authority.** The individuals executing this Agreement and the instruments referenced herein on behalf of Design-Build Entity each represent and warrant that they have the legal power, right and actual authority to bind Design-Build Entity to the terms and conditions hereof and thereof.

12.7 **Severability.** Each provision, term, condition, covenant and/or restriction, in whole and in part, in this Agreement shall be considered severable. In the event any provision, term, condition, covenant and/or restriction, in whole and/or in part, in this Agreement is declared invalid, unconstitutional, or void for any reason, such provision or part thereof shall be severed from this Agreement and shall not affect any other provision, term, condition, covenant and/or restriction of this Agreement and the remainder of the Agreement shall continue in full force and effect.

[signatures on the following page]

IN WITNESS WHEREOF, the parties hereto have caused this Agreement to be duly executed on the day and year first above written.

CITY OF RIVERSIDE, a California and municipal corporation

By: _____
City Manager

Attest: _____
City Clerk

Certified as to Availability of Funds:

By: _____
Chief Financial Officer

APPROVED AS TO FORM:

By: _____
Deputy City Attorney

Rev: 11/08/18

Anaergia Technologies, LLC,
a Delaware limited liability company

By: Yaniv Scherson (May 30, 2024 14:39 PDT)

_____
Yaniv Scherson, COO

Exhibit "A"

WORKERS' COMPENSATION CERTIFICATION

I am aware of the provisions of Section 3700 of the Labor Code which require every employer to be insured against liability for workers' compensation or to undertake self-insurance in accordance with the provisions of that code, and I will comply with such provisions before commencing the performance of the work of this contract.

DATED: _____

[Insert Name of DESIGN BUILD ENTITY**],**

By _____

_____
Printed Name and Title

(Appropriate Certificate to be attached to Agreement for Construction)

CERTIFICATE

(if Corporation)

STATE OF)
) SS:
COUNTY OF)

I, HEREBY, CERTIFY that during a meeting of the Board of Directors of the _____, a corporation existing under the laws of the State of _____, held on _____, 20___, the following resolution was duly passed and adopted:

> "RESOLVED, that _____, as _____ of the Corporation, be and is hereby authorized to execute the Agreement for _____ between the City of Riverside and this corporation and that his execution thereof and with the Corporate Seal affixed, shall be the official act and deed of this Corporation."

I further certify that said resolution is now in full force and effect.

IN WITNESS WHEREOF, I have hereunto set my hand and affixed the official seal of the corporation this _____, day of _____, 20___.

_____
Secretary

(SEAL)

(Appropriate Certificate to be attached to Agreement for Construction)

CERTIFICATE

(if Joint Venture)

STATE OF)
) SS:
COUNTY OF)

I, HEREBY, CERTIFY that during a meeting of the Principals of the _____, a joint venture existing under the laws of the State of _____, held on _____, 20___, the following resolution was duly passed and adopted:

> "RESOLVED, that _____, as_____ of the Joint Venture, be and is hereby authorized to execute the Agreement for _____ between the City of Riverside and this joint venture and that his execution thereof shall be the official act and deed of this Joint Venture."

I further certify that said resolution is now in full force and effect.

IN WITNESS WHEREOF, I have hereunto set my hand this _____, day of _____, 20___.

_____

Managing Partner

(Appropriate Certificate to be attached to Agreement for Construction)

CERTIFICATE

(if Partnership)

STATE OF)
) SS:
COUNTY OF)

I, HEREBY, CERTIFY that during a meeting of the Partners of the _____, a Partnership existing under the laws of the State of _____, held on _____, 20___, the following resolution was duly passed and adopted:

> "RESOLVED, that _____, as _____ of the Partnership, be and is hereby authorized to execute the Agreement for _____ between the City of Riverside and this partnership and that his execution thereof shall be the official act and deed of this Partnership."

I further certify that said resolution is now in full force and effect.

IN WITNESS WHEREOF, I have hereunto set my hand this _____, day of _____, 20___.

_____
Partner

Exhibit "B-1"

SCOPE OF WORK

Design-Build Entity will provide design-build services for the below scope of work to rehabilitate and reintegrate Digester 5 for return to service (by others) and as set forth in Exhibits B-2 through E, attached hereto and incorporated herein.

Demolition

- Digester Control Building Basement
    - Demolish P-6803 and P-6804
    - Demolish HE-6801 and HE-6802
    - Demolish P-6801 and P-6802
    - Demolish associated 6-CS-DI6, 4-HW-DI6
- Digester #5
    - Demolish Digester 5 roof
    - Demolish biogas piping 6-SG-S6
    - Demolish internal draft tubes
    - Demolish 14" mixer piping and blind flange
    - Demolish abandoned piping to nearest above ground point and cap

Mechanical/Equipment

- Install new actuated valve (6" MV41102) in Digester 1-2 Building (in Digester 1 & 2 basement)
- Install Flow Meter FIT 40102 with 2 isolation valves (in Digester 1 & 2 basement)
- Install new isolation valves MV41101 Digester 5 mixing header
- Install new digester heating pump P41101
- Install new hot water circulation pump p41102 with 3-way valve TWV-41101
- Install new Heat Exchanger HX41101
- Install other associated valves and instruments, as shown in Exhibit B-2
- Install new stainless-steel piping from digester roof to new condensate trap
- Install 2 new activated carbon vessels and associated valves
- Install new telescoping valve on overflow structure
- Install 2 service boxes with Anaergia PSM 1200 mixers on new digester roof

Structural

- Install new roof on Digester 5
- Repair Digester 5 concrete as outlined in Update of the Integrated Master Plan for the Wastewater Collection and Treatment Facilities, Volume 4, Chapter 11, Appendix 11A: Digester No. 5 – Food Waste Evaluation, Section 5.1 (June 2019)
- Apply coating to top 10 ft of digester wall

- Prepare surface per SSPC-SP 13
    - Shot blast, high-pressure water jet, or mechanical scarification as required to remove contaminants, laitance, weak concrete, and existing coatings
    - ICRI Concrete Surface Preparation: CSP 4-6
    - Air blast and detergent water cleaning to remove loose material, dust, oil and grease
- Apply coating per manufacturer's written recommendations
- Acceptable products
    - TNEMEC, Series 434, 125 mils, with topcoat Series G435, 15 mils
    - Sancon Technologies, Sancon 100, 60 to 125 mils
    - Zebron Corporation, Zebron, 20 mils min.
    - Belzona International Ltd., Belzona 5811, 2 coats, 16 mils min.
    - Or approved equal

Electrical/Instrumentation

- Demolish Existing MCC R
- Install new Electrical Gear with Breakers to feed Mixer Control Panel
- Digester 5 PLC will be located in new PLC Panel
- Install new Mixer Control Panel
- Install new 100A lighting panel to replace existing LP in MCC R
- MCC to include, as shown in Exhibit B-2
    - 15 HP VFD for Digester Sludge Pump
    - 5 HP DOL for Hot Water Recirculation Pump
    - 100 AMP Breaker for Mixer Control Panel
    - Provide at least 1 blank section for future use
- Connect Digester #5 PLC to Plant SCADA (pull new 6 pair single mode cable between FTU-47 and FTU-46)
- Provide new SCADA screens
- SCADA integration by others

Civil/Yard Piping

- Install 8" BG (HDPE) piping from Digester 5 to the biogas header near the flare – 500 ft
- Install 4" Hot Water Supply are Return (2 lines) between Existing Boiler Loop to Digester 5 Control Building Basement – 100 ft each way (200 ft total)
- Install 6" Digester Feed from existing digester feed loop between Digester 1-2 to Digester 5 mixing header
- Install 8" Digester 5 Overflow to Digestate Storage Tank 8" DI – 220 ft
- Patch trench to meet existing road conditions

Clarifications & Exclusions

- Design-Build Entity has not completed a comprehensive review of existing site conditions or completed all necessary testing. In the event that conditions differ from stated assumptions, an equitable adjustment will be made via change order procedures.

- Anaergia to provide Digester 5 start up and re-seeding plan and supervision. Emptying and purging of Digester 5, provision of seed from existing digesters, and operations to execute plan by City.

General

- Proposal is based on overall project schedule of 18 months
- Proposal is based on receiving NTP July 2024
- Includes Payment & Performance Bond
- Excludes 3rd party testing (Concrete / Compaction / Welding)

Underground/Earthwork

- Proposal includes an Existing Utility Investigation of 5 days of Ground Radar Penetration, and Potholing - 64 each locations for existing utilities shown on as-builts drawings provided.
- We have assumed that all trenching can be excavated using traditional equipment. Blasting or percussion method (Excavator with hammer) is excluded.
- Basis of costing assumed all trench excavation subgrade (Bottom of Trench) to be 5ft below existing asphalt.
- Proposal includes SE 30 Fill Sand for bed and zone around all new underground pipes.
- We assumed that all excavated native soil will be re-used for backfill, with concurrence from a geotechnical engineer (City to provide geotechnical engineer).
- Proposal includes demolition and replacement of asphalt per City standard drawing no. 453. Basis of costing assumed four inches of asphalt, and placing eight inches of Class 2 Base beneath the new asphalt.
- We have excluded rock excavation, handling of contaminated or hazardous soils, groundwater dewatering, soil import, environmental soil testing, shoring or removal of shoring, cost of water and/or water meter charges, removal or export of hazardous or contaminated waste.

Concrete

- Slab and wall dimensions based on the Repair Digester Concrete per Carollo MEMO, June 2019 FINAL, OPTION 1
- (sheet 26). We have included a marked up drawing showing detailed size assumptions.
- Edge of slab at 9'-0" from interior face of existing digester wall and slab thickness scaled to 1'-3".
- Top of wall at 11'-0" from top of slab 1'-3" thick and wall thickness scaled to 1'-0".
- Drill & epoxy #6 rebar dowels: 15 dowels per row; 1'-6" spacing at wall radius; 157 rows X 15 = 2,355 dowels.
- Epoxy HIT-RE 500 V3, per HILTI App calculator, and 16.9 fl oz cartridges: #6 rebar, 10" deep, 10 cartridges/100
- (+10% waste).
- Use 5000 psi water pressure washer to clean existing concrete and remove laitance. (No Sandblasting included)
- Mixer Post supports (Anaergia Markups 1/18/2024): 2 each, 3'Dia x 1.5'H, D&E #6 @ 12"o.c. & 10"emb.

- Pump Equipment Pads (Anaergia Markups 1/18/2024): 2 each, 5'Lx2.5'Wx0.5'H, D&E #6 @ 12"o.c. & 10"emb.
- We have assumed 200 lb/cy for reinforcing steel at a cost of $2.00/lb installed

Equipment
Installation of the following equipment:

Digester #5 Upgrades

Item	P&ID Sheet	Tag No.	Qty
Electric Actuator for valve connecting existing piping in Dig 1-2 Control Building	1	MV-41102	1
Flow Indicating Transmitter	1	FT-40102	1
Three-Way Safety Selector Valve	1	TWV-41102	1
Combination Biogas Pressure Relief Valve/Flame Arrestor Assemblies	1	PSV-41101/2	2
Condensate Trap Inlet Isolation Valve	1	MV-41107	1
Condensate Trap Bypass Valve	1	MV-41108	1
Condensate Trap	1	TRP-41101	1
Condensate Trap to Drip Trap Isolation Valve	1	MV-41110	1
Drip Trap	1	TRP-41102	1
Drip Trap Drain Isolation Valve (this valve is an integral part of the drip trap and may be an automated float valve))	1	MV-41121	1
Condensate Trap Discharge Isolation Valve	1	MV-41109	
Biogas Line Isolation Valves	1	MV-41133	1
Level Indicating Transmitter Isolation Valve	1	MV-41130	1
Level Indicating Transmitter	1	LIT-41101	1
Biogas Discharge Line Isolation Valve	1	MV-21125	1
Biogas Discharge Line Pressure Transmitter Isolation Valve	1	MV-41106	1
Biogas Discharge Line Pressure Transmitter Diaphragm Seal	1	DS-41101	1
Biogas Discharge Line Pressure Transmitter	1	PIT-41101	1
Biogas Insertion Flow Transmitter Isolation Valve	1	MV-41103	1
Condensate Trap Flow Indicating Transmitter	1	FIT-41103	1
Digester Mixers	1	MX411-1/2	2
Digester Mixer Service Boxes	1	SB-41101/2	2
Digester Mixer Service Box Pressure Equalization Isolation Valves	1	MV-41131/32	2
Digester Roof	1	R-41101	1
Digester Overflow Box Level Transmitter	1	LIT-41102	1
Digester Overflow Box Telescoping Valve	1	TSV-41101	1

Digester #5 Heating System Upgrades

Item	P&ID Sheet	Tag No.	Qty
Heating Loop Sludge Inlet Valve	2	MV-41103	1
Heating Loop Sludge Recirculation Pump Inlet Isolation Valve	2	MV-41111	1
Heating Loop Sludge Recirculation Pump	2	P-41101	1
Heating Loop Sludge Drain Valve	2	MV-41113	1
Heating Loop Sludge Line Annuar Ring Type Seal	2	DS-23001	1
Heating Loop Pump Discharge Pressure Switch Isolation Valve	2	MV-41116	1
Heating Loop Pump Discharge Pressure Switch	2	PSH-41101	1
Heating Loop Pump Discharge Pressure Gauge Isolation Valve	2	MV-41117	1
Heating Loop Pump Discharge Pressure Gauge	2	PI-41101	1
Heating Loop Sludge Recirculation Pump Discharge Isolation Valve	2	MV-41112	1
Heat Exchanger Sludge Inlet Temperature Indicating Transmitter	2	TIT-41101	1
Heat Exchanger Sludge Inlet Isolation Valve	2	MV-41112	1
Heat Exchanger	2	HX-41101	1
Heat Exchanger Sludge Discharge Temperature Indicating Transmitter	2	TIT-41101	1
Heat Exchanger Sludge Discharge Isolation Valve	2	MV-41115	1
Heating Loop Sludge Flow Indicating Transmitter	2	FIT-41101	1
Heating Loop Sludge Discharge Isolation Valve	2	MV-41120	1
Hot Water Line Inlet Isolation Valve	2	MV-41122	1
Hot Water Line Three-Way Diverting Valve	2	TWV-41101	1
Hot Water Circulation Pump	2	P-41102	1
Hot Water Line Temperature Indicating Transmitter	2	TIT-41103	1
Hot Water Line Heat Exchanger Inlet Isolation Valve	2	MV-41119	1
Hot Water Line Return Line Isolation Valve	2	MV-41124	1

<u>Digester #5 Upgrades - Additional Items</u>

Item	P&ID Sheet	Tag No.	Qty
Biogas pressure Relief Line Activated Carbon H2S Vessel Inlet Isolation Valves	1	MV-41126/7	2
Activated Carbon Vessels	1	AC-41101/2	2
Activated Carbon H2S Vessel Discharge Isolation Valves	1	MV-41128/9	2

Painting & Coating

- Concrete Coating of upper 10' of the Digester 5 wall, per following requirements:
- Prepare surface per SSPC-SP 13
- Shot blast, high-pressure water jet, or mechanical scarification as required to remove contaminants, laitance,
- weak concrete, and existing coatings
- ICRI Concrete Surface Preparation: CSP 4-6
- Air blast and detergent water cleaning to remove loose material, dust, oil and grease
- Apply coating per manufacturer's written recommendations
- Acceptable products
- TNEMEC, Series 434, 125 mils, with topcoat Series G435, 15 mils
- Sancon Technologies, Sancon 100, 60 to 125 mils
- Zebron Corporation, Zebron, 20 mils min.
- Belzona International Ltd., Belzona 5811, 2 coats, 16 mils min.
- Or approved equal
- We have included an allowance of $51,000 for field coating of pipe & equipment

Piping

- We have included detailed assumptions on the attached marked up site plan.
- We have excluded the purchase of all valves (by Anaergia), WML to install them only
- We have included an allowance of $20,000 for pipe insulation exposed HWR & HWS lines (no insulation on

Electrical

- See quote provided by Southern Contracting with list of inclusions/exclusions
- No underground ductbank is included, assuming that conduits can be run in existing concrete trench between Digester No. 3 Bld & No. 4 Building
- MCC 5 as quoted; submittals 8-12 weeks and manufacturing lead times estimate of 35-37 weeks.
    - This proposal is based on stainless steel conduit support and retention systems and PVC-coated RGS conduit systems
    - This proposal assumes digester 5 walls and roof are suitable for mechanical wedge anchors and that conduit can be run across digester 5 roof to equipment connection points.
    - This proposal accounts for testing of existing feeders for MCC to be replaced, and assumes reuse of those feeders for new MCC.
    - The concrete trough connecting control building #3 and digester #1/ digester #2 control building is assumed to have room enough for additional conduit indicated to be run there.
    - Instruments, mixer control panel (MCP), mixers and service boxes to be provided by Anaergia; PLC and
- SCADA screens to be furnished by WML
- Digester 5 PLC Panel to include:
    - Freestanding NEMA 3R Enclosures (2-Sections)
    - Main Circuit Breaker
    - Surge Protection Device 'SPD'

- 24VDC Power Supply
- Distribution Breakers as Required
- Operator Interface Terminal 'OIT' (Magelis Harmony)
- (2) Programmable Logic Controller 'PLC' (Modicon M580) Hot Standby
- Unmanaged Ethernet Switch
- Fiber Patch Panel
- Uninterruptible Power Supply 'UPS'
- GFCI Receptacle
- Panel Light & Switch
- Panel Fan Kit
- Panel Heater & Thermostat
- Terminal Blocks, Relays & Nameplates as Required
- Engineering (Submittals and O&M Manuals) Interconnection Wiring Diagrams.
- PLC & OIT Programming (Modicon M580)
- Networking & Telemetry: Ethernet Switch Configuration
- Manufacturing Services
- Field Services (Start-Up & Commissioning of Provided Equipment)

Digester No. 4 Building Mechanical - ALLOWANCE

- We have priced the work in this area as an allowance - pricing can be adjusted based on final design
- No detailed design is available and exact pipe routing could not be determined
- The exact pipe routing will need to be field verified as there are many existing lines, conduits and obstructions that will need to verify during the engineering phase and be worked around.
- We have included 45 shifts of a 4 man pipe crew and approximately $88,000 in material costs

Digester No. 5 Epoxy Injection and Xypex Waterproofing Coating - ALLOWANCE

- We have priced this work as an allowance - pricing can be adjusted based on final design
- Per the Carollo Report: We included costs for 200 LF of Epoxy Injection.
- The Carollo Report also discusses Xypex coating: We included costs for Xypex coating on the interior of the digester: the section of wall above the new concrete wall and below the new coating, approximately 12' -6' section of wall around the circumference (approximately 2,950 SF) - Cost is approximately $80,000

Clarifications and Exclusions

- The Scope of Work is based on the following clarifications and exclusions:
  - Equipment & Services by Others (Excluded)
    - Fiber Optic Cable
    - Fiber Optic Termination and Testing to be performed by others
  - Typical Equipment & Services Exclusions (Unless Specifically Defined on the Above Scope)
    - Local Control Stations
    - Junction and Pull Boxes
    - Disconnect Switches

- Security Equipment (Cameras, DVRs, Card Readers, Etc.)
- Conduit, Field Wire and Tubing
- Basic Trade Materials (Screws, Bolts, Brackets, Stanchions, Sunshields, Anchor Bolts, Etc.)
- Fiber Optic Patch Panels, Fiber Optic Cable, Fiber Optic Cable Testing and Terminations
- 3rd Party Testing, Harmonic Testing / Analysis, Protective Device Coordination Studies, Short Circuit Studies, and Arc-Flash Hazard Analysis / Training
- Electrical Interconnection Wiring Diagrams, ISA Loop Diagrams and Signal Loop Diagrams for Equipment Not Provided by W.M. Lyles System Integration Division or When Specifications Do Not Define the Require for these Specific Professional Services
- Liquidated Damages when Manufacturer or Vendor Timeframe Constraints Occur Outside of the W.M. Lyles System Integration Division's Control
- Video Taping of Professional Services (3rd Party Video Taping is Acceptable)
- Approved Submittals are Considered to Meet the Needs of the Project Specifics Based on the Engineer of Records Review, Comments and Approval
    - Requests for Modifications to the Equipment or Professional Services After Submittal Approval Will Require a Change Order Before Any Modifications Occur Regardless of Schedule Constraints
- Equipment & Services Not Specifically Defined in the Above Scope of Work
- Noise Mitigation Equipment and/or Noise Barriers
- Ventilation Equipment and Team Watch Resources for Work Required in Confined Spaces
- Removal, Replacement and/or Relocation of Existing Utilities

- Excludes overtime, weekend, holiday work. Based on standard 8-hour workday.

Exhibit "B-2"

PRELIMINARY DESIGN BASIS

Preliminary design documents include:

- Piping and instrumentation diagram
- Equipment list
- Electrical load and motor load list
- Instrument list
- Valve list
- Electrical Layout Drawing (Conceptual)
- Digester 5 MCC R diagram
- Site Layout Drawing (Conceptual)

FOR ESTIMATION ONLY

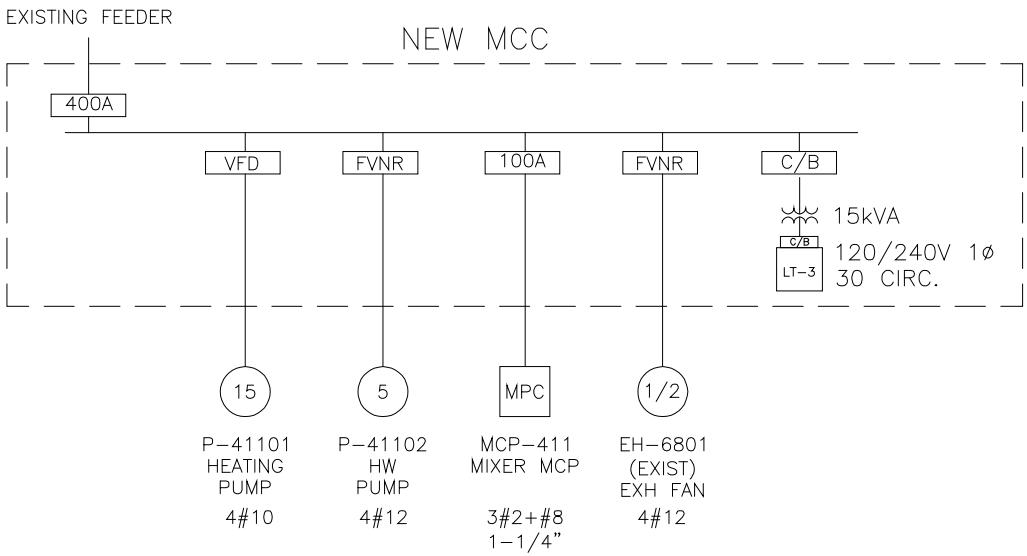

NOTES:

1. ALL CIRCUITS SHOWN ARE 1" PVC COATED RIGID
2. CABLE SHALL BE THWN
3. ALL CONDUCTORS SHALL HAVE SLIP ON WIRE TAGS.
4. PROVIDE CLASS 1 DIV 1 DISCONNECT(S) AND CONTROL JBOX(S) FOR MIXER
5. PROVIDE ELECTRICAL TESTING ON 400A FEEDER CABLE FROM DISTRIBUTION STATION W TO MCC 5 TO EVALUATE CABLE CONDITON AND FITNESS FOR CONTINOUS OPERATION
6. MIXER PANEL MCP-411 FURNISHED BY ANAERGIA

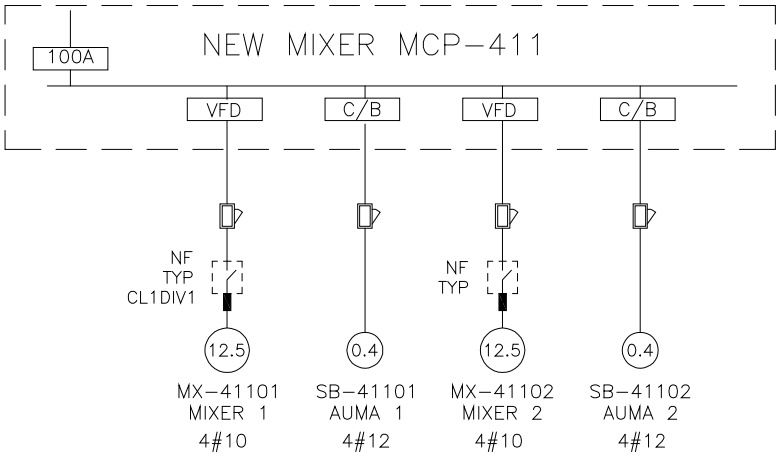

MIXER MCP ONE LINE

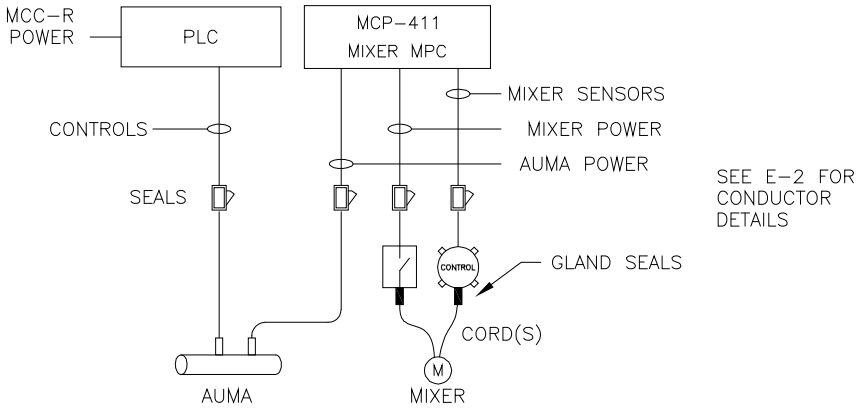

SEE E-2 FOR CONDUCTOR DETAILS

MIXER POWER/CONTROL DIAGRAM

REV#	DESCRIPTION	DRWN BY	CHK'D BY	DATE
0	ISSUED FOR REVIEW	MLB	-	2/16/2024

ATTENTION: 0 1/2 1 — IF THIS BAR DOES NOT MEASURE 1" @ 22x34 or ½" @ 11x17, THEN DRAWING IS NOT TO SCALE - SCALE ACCORDINGLY

Anaergia
Breaking Barriers to Sustainability

The entire content of this drawing and any related documents are and shall remain the intellectual property on Anaergia, Inc., and shall not be used for any commercial or noncommercial purpose except as authorized in written agreement with or other written consent granted by said company. This drawing and all related document are protected in all forms not known or hereafter developed. User may not copy, download, use or re-transmit any portiion of such drawing or related documents , except as authorized in a written agreement with or other written consent granted by said company.

DESIGNED:	MLB
DRAWN:	MLB
CHECKED:	-
APPROVED:	-
REF#	-
PROJECT #:	-
SCALE:	-

CITY OF RIVERSIDE

ONE LINE

DRAWING NUMBER: E-1

REV 0

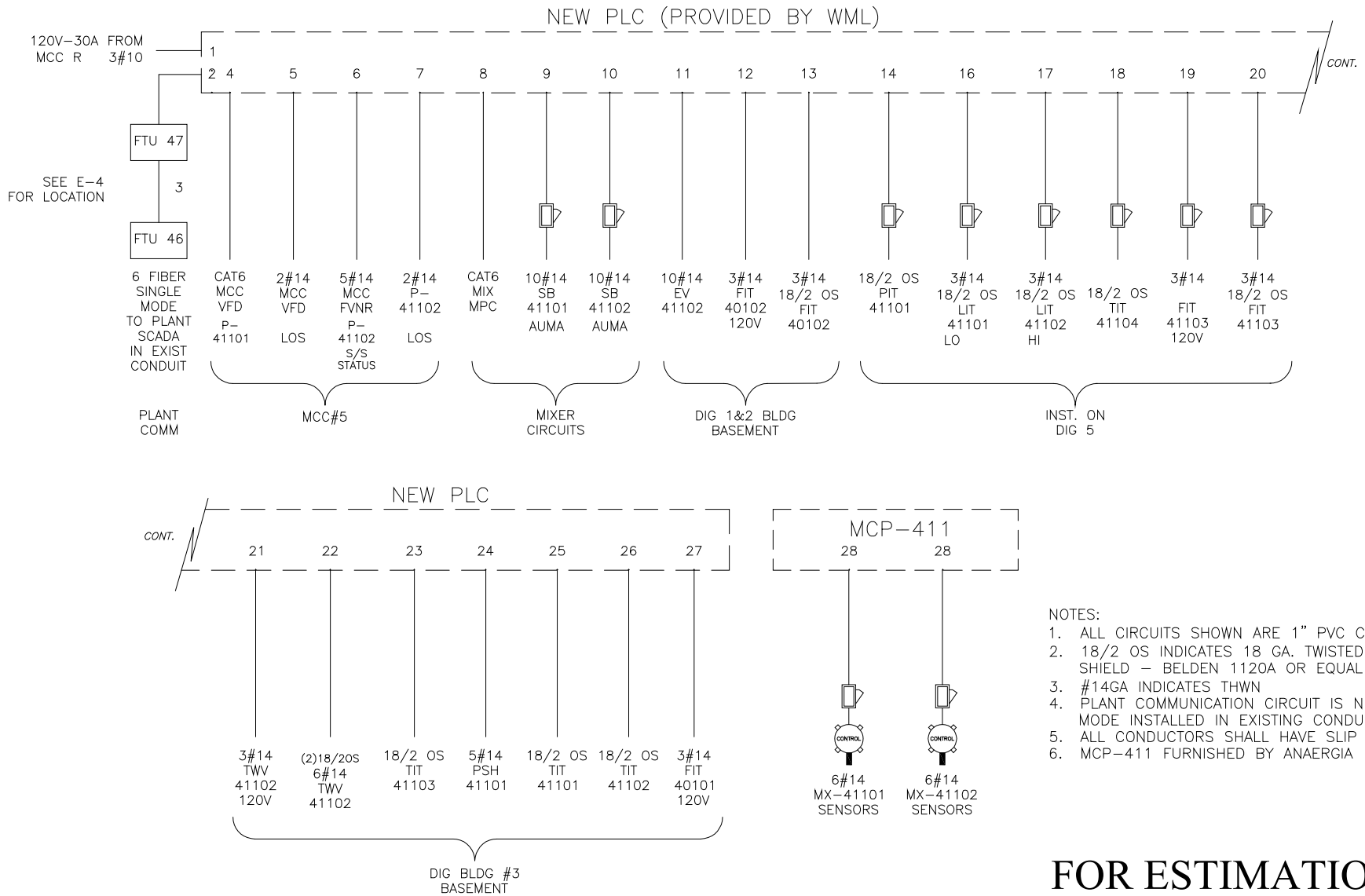

NOTES:
1. ALL CIRCUITS SHOWN ARE 1" PVC COATED RIGID UON
2. 18/2 OS INDICATES 18 GA. TWISTED PAIR WITH OVERALL SHIELD – BELDEN 1120A OR EQUAL
3. #14GA INDICATES THWN
4. PLANT COMMUNICATION CIRCUIT IS NEW 6 FIBER, SINGLE MODE INSTALLED IN EXISTING CONDUIT
5. ALL CONDUCTORS SHALL HAVE SLIP ON WIRE TAGS
6. MCP-411 FURNISHED BY ANAERGIA

FOR ESTIMATION ONLY

REV#	DESCRIPTION	DRWN BY	CHK'D BY	DATE
0	ISSUED FOR REVIEW	MLB	-	2/16/2024

ATTENTION: 0 1/2 1 — IF THIS BAR DOES NOT MEASURE 1" @ 22x34 or ½" @ 11x17, THEN DRAWING IS NOT TO SCALE - SCALE ACCORDINGLY

Anaergia
Breaking Barriers to Sustainability

The entire content of this drawing and any related documents are and shall remain the intellectual property on Anaergia, Inc., and shall not be used for any commercial or noncommercial purpose except as authorized in written agreement with or other written consent granted by said company. This drawing and all related document are protected in all forms not known or hereafter developed. User may not copy, download, use or re-transmit any portiion of such drawing or related documents , except as authorized in a written agreement with or other written consent granted by said company.

DESIGNED:	MLB
DRAWN:	MLB
CHECKED:	-
APPROVED:	-
REF#	-
PROJECT #:	-
SCALE:	-

CITY OF RIVERSIDE

INSTRUMENTATION BLOCK DIAGRAM

DRAWING NUMBER: E-2

REV 0

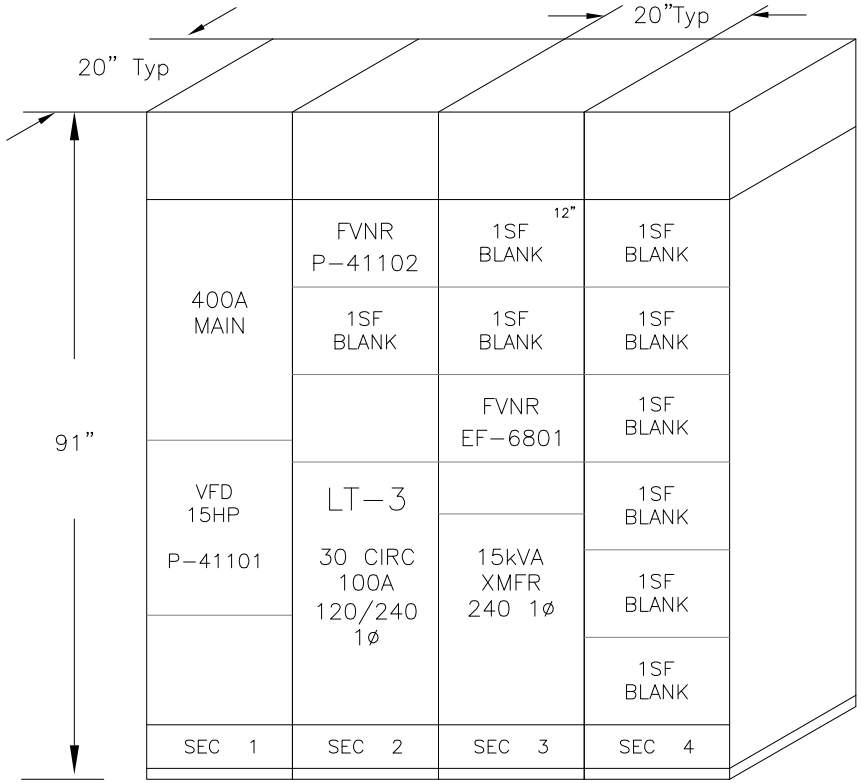

NEW MCC R

1. MCC LAYOUT SPACE ALLOCATION IS ESTIMATION ONLY – PROVIDE MANUF LAYOUT
2. PROVIDE 4 SECTIONS 20"Wx20"D
3. NEMA 1A ENCLOSURE

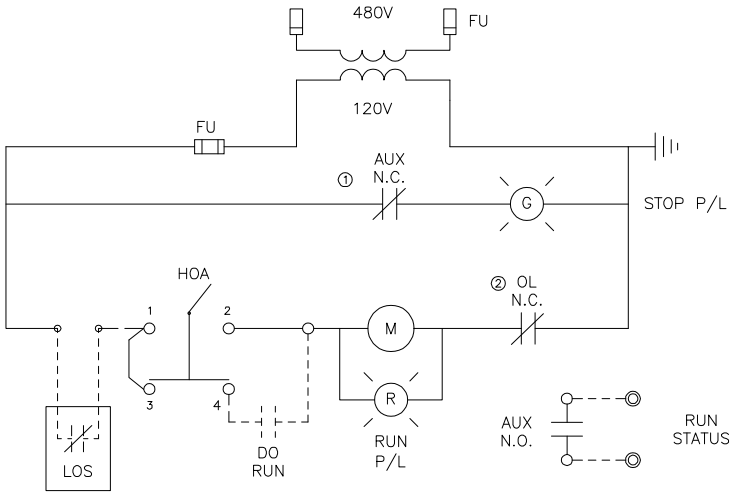

FVNR PUMP CONTROL WD

1. RE-USE EXISTING LOCK OUT STATIONS (LOS) LOCATED AT PUMP MOTOR(S)

FOR ESTIMATION ONLY

REV#	DESCRIPTION	DRWN BY	CHK'D BY	DATE
0	ISSUED FOR REVIEW	MLB	-	2/7/2024

ATTENTION: 0 1/2 1 — IF THIS BAR DOES NOT MEASURE 1" @ 22x34 or ½" @ 11x17, THEN DRAWING IS NOT TO SCALE - SCALE ACCORDINGLY

Anaergia
Breaking Barriers to Sustainability

The entire content of this drawing and any related documents are and shall remain the intellectual property on Anaergia, Inc., and shall not be used for any commercial or noncommercial purpose except as authorized in written agreement with or other written consent granted by said company. This drawing and all related document are protected in all forms not known or hereafter developed. User may not copy, download, use or re-transmit any portiion of such drawing or related documents , except as authorized in a written agreement with or other written consent granted by said company.

DESIGNED:	MLB
DRAWN:	MLB
CHECKED:	-
APPROVED:	-
REF#	-
PROJECT #:	-
SCALE:	-

CITY OF RIVERSIDE

NEW MCC R ELEVATION

DRAWING NUMBER: E-3

REV 0

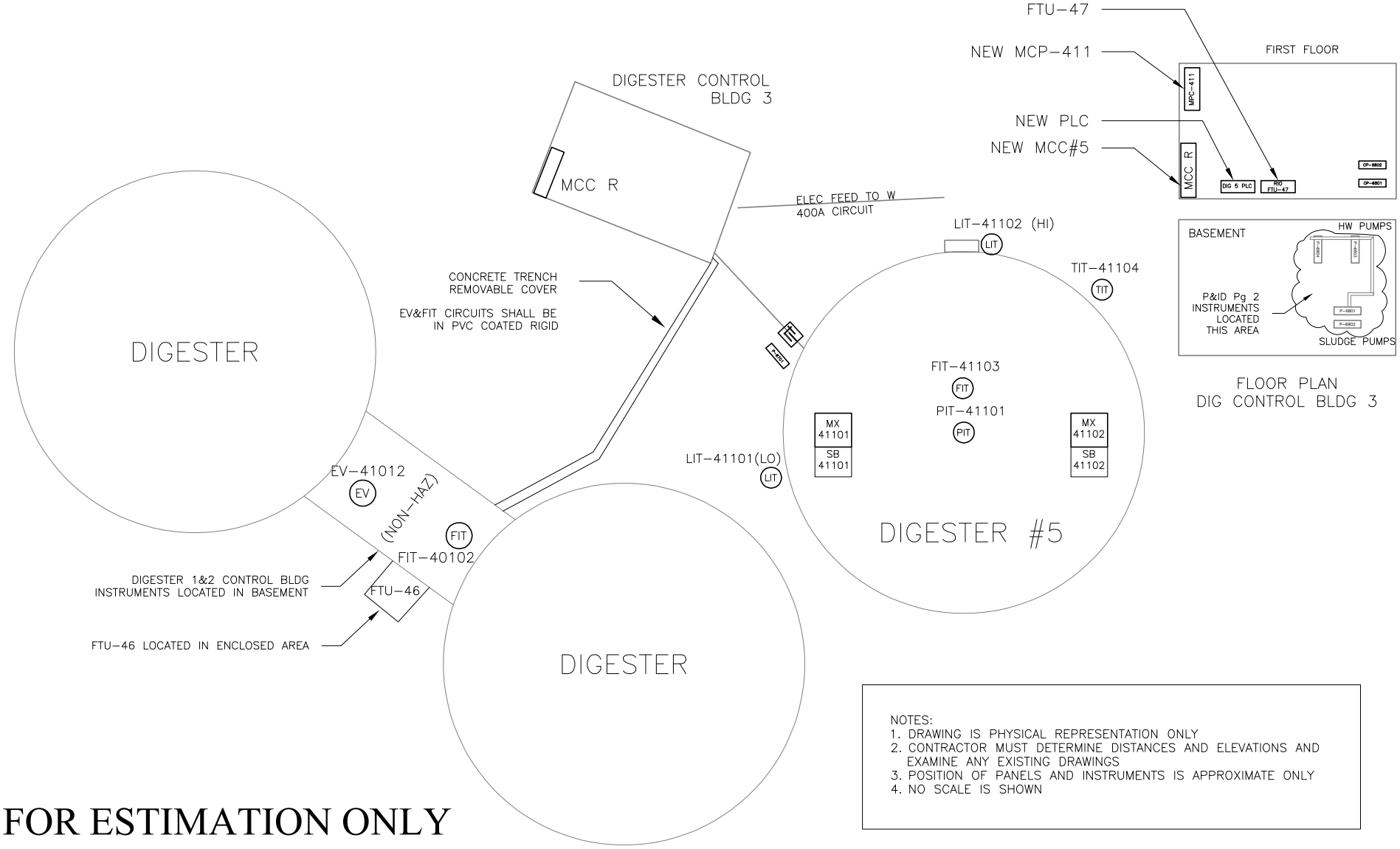

NOTES:
1. DRAWING IS PHYSICAL REPRESENTATION ONLY
2. CONTRACTOR MUST DETERMINE DISTANCES AND ELEVATIONS AND EXAMINE ANY EXISTING DRAWINGS
3. POSITION OF PANELS AND INSTRUMENTS IS APPROXIMATE ONLY
4. NO SCALE IS SHOWN

FOR ESTIMATION ONLY

REV#	DESCRIPTION	DRWN BY	CHK'D BY	DATE
0	ISSUED FOR REVIEW	-	-	-

ATTENTION: 0 1/2 1 — IF THIS BAR DOES NOT MEASURE 1" @ 22x34 or ½" @ 11x17, THEN DRAWING IS NOT TO SCALE - SCALE ACCORDINGLY

Anaergia
Breaking Barriers to Sustainability

The entire content of this drawing and any related documents are and shall remain the intellectual property on Anaergia, Inc., and shall not be used for any commercial or noncommercial purpose except as authorized in written agreement with or other written consent granted by said company. This drawing and all related document are protected in all forms not known or hereafter developed. User may not copy, download, use or re-transmit any portiion of such drawing or related documents , except as authorized in a written agreement with or other written consent granted by said company.

DESIGNED:	MLB
DRAWN:	MLB
CHECKED:	-
APPROVED:	-
REF#	-
PROJECT #:	-
SCALE:	NONE

CITY OF RIVERSIDE

GENERAL ARRANGEMENT

DRAWING NUMBER: E-4

REV 0

CKT #	USAGE	WATT	BKR AMP	BKR POLE	L1 L2	BKR POLE	BKR AMP	WATT	USAGE	CKT #
1	Bsmt. Ltg. West	920	20	1		1	20	800	1st. Fl. Ltg. West	2
3	Bsmt. Ltg. East	800	20	1		1	20	1040	1st. Fl. Ltg. East	4
5	Dig. #5 Lights	480	20	1		1	20	25	Alarm Panel	6
7	Waste Gas Burner	50	20	1		1	20	100	L1-6701	8
9	~~BLR 6801~~	800						800	BLR-6802	10
11	" "	800	20	2		2	20	800	~~BLR 6802~~	12
13	Recept.	600	20	1		2	20	800	~~Future Boiler~~	14
15	Recept.	600	20	1				800		16
17	Recept.	400	20	1		2	20	800	~~Future Boiler~~	18
19	Spare		"	"				800		20
21	"		"	"		1	20		Spare	22
23	"		"	"		"	"		"	24
25	~~Boiler 6802 Cont.~~		"	"		"	"		~~Boiler 6801 Cont.~~	26
27			"	"		"	"		"	28
29	"		"	"		"	"		"	30
31	Space		"	"		"	"		Space	32
33	"		"	"		"	"		"	34
35	"		"	"		"	"		"	36
37	"		"	"		"	"		"	38
39	"		"	"		"	"		"	40
41	"		"	"		"	"		"	42

S/N

Main Breaker: 100A, 2P

L1

L2

PANEL LT 3 120/240V 1Ø, 3W ⚠

LOCATION: MCC 'R' Digester Control Bldg. No. 3

EXISTING LT–3

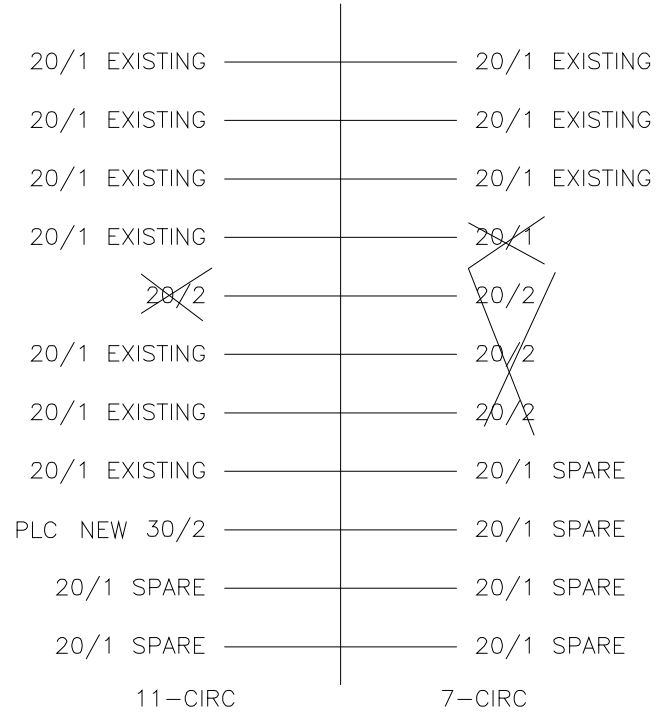

1. FOR REFERENCE ONLY
2. ALL BOILER CIRCUITS REMOVED
3. PRICE 1/2 OF CIRCUITS WITH NEW WIRE (EXCEPT DIGESTER 5 LIGHTS)
4. NO NEW CONDUIT EXPECTED
5. ADD 30/2 FOR PLC

FOR ESTIMATION ONLY

REV#	DESCRIPTION	DRWN BY	CHK'D BY	DATE
0	ISSUED FOR REVIEW	-	-	-

ATTENTION: 0 1/2 1 — IF THIS BAR DOES NOT MEASURE 1" @ 22x34 or ½" @ 11x17, THEN DRAWING IS NOT TO SCALE - SCALE ACCORDINGLY

Anaergia — Breaking Barriers to Sustainability

The entire content of this drawing and any related documents are and shall remain the intellectual property on Anaergia, Inc., and shall not be used for any commercial or noncommercial purpose except as authorized in written agreement with or other written consent granted by said company. This drawing and all related document are protected in all forms not known or hereafter developed. User may not copy, download, use or re-transmit any portion of such drawing or related documents , except as authorized in a written agreement with or other written consent granted by said company.

DESIGNED:	MLB
DRAWN:	MLB
CHECKED:	-
APPROVED:	-
REF#	-
PROJECT #:	-
SCALE:	NONE

CITY OF RIVERSIDE

PANEL LT-3

DRAWING NUMBER: E-5

REV 0

CLIENT: RIVERSIDE PUBLIC WORKS

PROJECT: DIGESTER 5 REBAB

**PLACE: 5950 ACORN ST,
RIVERSIDE, CA 92504**

Anaergia

Fueling a Sustainable World™

ABBREVIATIONS	L1
TAGGING INFO	L2
SYMBOLS	L3
SYMBOLS	L4
DIGESTER 5	1
DIGESTER 5 HEAT LOOP	2

REV NUM	DESCRIPTION	BY	DATE
D00	ISSUED FOR BID	ASD	01/19/2024
D01	RE-ISSUED FOR BID	MP	02/02/2024

ATTENTION:
0 1/2 1
IF THIS BAR DOES NOT MEASURE 1" @ 22x34 OR 1/2" @ 11x17, THEN DRAWING IS NOT TO SCALE - SCALE ACCORDINGLY

Anaergia
Fueling a Sustainable World™

The entire content of this drawing and any related documents are and shall remain the intellectual property of Anaergia, Inc., and shall not be used for any commercial or noncommercial purpose except as authorized in written agreement with or other written consent granted by said company. This drawing and all related documents are protected in all forms not known or hereafter developed. Users may not copy, download, use or re-transmit any portion of such drawing or related documents, except as authorized in a written agreement with or other written consent granted by said company.

DRAWN: MP
CHECKED: AD
APPROVED: AD AD
PROJ. MANAGER: ASD
STATUS:
FILE NAME: 0182 A005 01

RIVERSIDE PUBLIC WORKS
DIGESTER 5 REBAB
5950 ACORN ST, RIVERSIDE, CA 92504

TABLE OF CONTENTS

DRAWING NUMBER
RIVERSIDE

SHEET TOC
REV D0

INSTRUMENT TAG IDENTIFICATION

TAG NAME — FL: FIRST LETTER, SEE ISA TABLE BELOW
FM: SUCCEEDING LETTERS, SEE ISA TABLE BELOW
HOA: TAG FUNCTION ABBREVIATION, SEE LISTING TO THE RIGHT

TAG NUMBER — 1: BLOCK NUMBER
2: SEQUENTIAL NUMBER
(See Sheet 02)

INSTRUMENT FUNCTIONS																												
SUCCEEDING LETTER		A						C		E	G	I	L	Q	R	S					T		Y	V,S				
FIRST LETTER	MEASURED OR INITIATING VARIABLE	ALARM	HIGH- HIGH ALARM	HIGH ALARM	LOW ALARM	LOW-LOW ALARM	SENSOR FAULT ALARM	BLIND CONTROLLER	INDICATING CONTROLLER	SENSOR (PRIMARY ELEMENT)	GLASS	INDICATOR	PILOT LIGHT	TOTALIZER	RECORD	SWITCH	HIGH-HIGH SWITCH	HIGH SWITCH	LOW SWITCH	LOW-LOW SWITCH	BLIND TRANSMITTER	INDICATING TRANSMITTER	SOLENOID VALVE (PILOT), RELAY, COMPUTATION, CONVERTER	CONTROL VALVE	VALVE	FINAL CONTROL ELEMENT	SPECIAL IDENTIFICATION SYMBOL	SPECIAL IDENTIFICATION DESCRIPTION
A	ANALYSIS	AA	AAHH	AAH	AAL	AALL	AAT	AC	AIC	AE		AI	AL		AR	AS	ASHH	ASH	ASL	ASLL	AT	AIT	AY	ACV	AV	AZ		
B	BURNER, COMBUSTION																											
C	USER'S CHOICE																											
D	USER'S CHOICE																											
E	VOLTAGE	EA	EAHH	EAH	EAL	EALL	EAT	EC	EIC	EE		EI	EL		ER	ES	ESHH	ESH	ESL	ESLL	ET	EIT	EY			EZ		
F	FLOW	FA	FAHH	FAH	FAL	FALL	FAT	FC	FIC	FE	FG	FI	FL	FQI	FR	FS	FSHH	FSH	FSL	FSLL	FT	FIT	FY	FCV	FV		FO	ORIFICE PLATE
FF	FLOW RATIO	FFA	FFAHH	FFAH	FFAL	FFALL		FFC	FFIC			FFI			FFR	FFS	FFSHH	FFSH	FFSL	FFSLL			FFY	FFCV				
G	USER'S CHOICE																											
H	HAND	HA						HC	HIC				HL			HS								HCV	HV		HMS	HMI PUSHBUTTON
	CURRENT (ELECTRICAL)	IA	IAHH	IAH	IAL	IALL	IAT	IC	IIC	IE		II	IL		IR	IS	ISHH	ISH	ISL	ISLL	IT	IIT	IY			IZ		
J	POWER	JA	JSHH	JAH	JAL	JALL	JAT	JC	JIC	JE		JI	JL	JQI	JR	JS	JSHH	JSH	JSL	JSLL	JT	JIT	JY			JZ		
K	TIME SCHEDULE	KA										KI	KL			KS							KY					
KQ	TIME TOTAL	KQA	KQAHH	KQAH	KQAL	KQALL						KQI	KQL		KQR	KQS	KQSHH	KQSH	KQSL	KQSLL								
L	LEVEL	LA	LAHH	LAH	LAL	LALL	LAT	LC	LIC	LE	LG	LI	LL		LR	LS	LSHH	LSH	LSL	LSLL	LT	LIT	LY	LCV	LV		LB	LEVEL BY-PASS
M	MOTOR CONTROL															MS												
N	USER'S CHOICE																											
O	USER'S CHOICE																											
P	PRESSURE OR VACUUM	PA	PAHH	PAH	PAL	PALL	PAT	PC	PIC	PE		PI	PL		PR	PS	PSHH	PSH	PSL	PSLL	PT	PIT	PY	PCV	PV		PSV	PRESSURE SAFETY VALVE
PD	PRESSURE DIFFERENTIAL	PDAP	DAHH	PDAH	PDAL	PDALL	PDAT	PDC	PDIC			PDI	PDL		PDR	PDS	PDSHH	PDSH	PDSL	PDSLL	PDT	PDIT	PDY	PDCV				
Q	QUANTITY	QA	QAHH	QAH	QAL	QALL						QI	QL	QQI	QR													
R	RADIATION																											
S	SPEED OR FREQUENCY	SA	SAHH	SAH	SAL	SALL	SAT	SC	SIC	SE		SI	SL		SR	SS	SSHH	SSH	SSL	SSLL	ST	SIT	SY	SCV		SZ	SK	SPEED CONTROL STATION
T	TEMPERATURE	TA	TAHH	TAH	TAL	TALL	TAT	TC	TIC	TE		TI	TL		TR	TS	TSHH	TSH	TSL	TSLL	TT	TIT	TY	TCV	TV	TZ	TW	THERMOWELL
U	MULTI-VARIABLE																											
V	VIBRATION OR MECH. ANALYSIS	VA	VAHH	VAH			VAT			VE		VI	VL		VR	VS	VSHH	VSH			VT	VIT	VY					
W	WEIGHT OR FORCE	WA	WAHH	WAH	WAL	WALL	WAT	WC	WIC	WE		WI	WL	WQI	WR	WS	WSHH	WSH	WSL	WSLL	WT	WIT	WY	WCV	WV	WZ		
X	UNCLASSIFIED																											
Y	EVENT, STATE OR PRESENCE	YA										YI	YL		YR	YS												
Z	POSITION OR DIMENSION	ZA	ZAO=OPEN		ZAC=CLOSE		ZAT	ZC	ZIC	ZE	ZG	ZI	ZL		ZR	ZS	ZSO=OPEN		ZSC=CLOSE		ZT	ZIT	ZY	ZCV	ZV	ZZ		

LINE IDENTIFICATION
PROCESS FLOW

LINE COLOR GUIDE

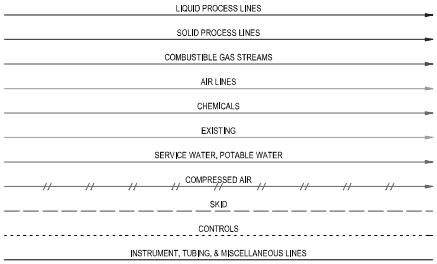

PROCESS FLOW INTERFACE SYMBOLS

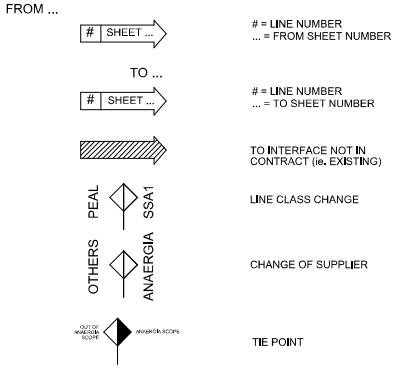

GENERAL NOTES

1. THERE IS NO INTENT TO SHOW ALL DETAIL OF EXISTING FACILITIES ON THE P&ID'S.
2. THIS IS A STANDARD LEGEND.
3. NOT ALL OF THE INFORMATION SHOWN ON THIS LEGEND WILL BE APPLICABLE TO THIS PROJECT.

REV NUM	DESCRIPTION	BY	DATE
D00	ISSUED FOR BID	ASD	01/19/2024
D01	RE-ISSUED FOR BID	MP	02/02/2024

ATTENTION: 0 1/2 1
IF THIS BAR DOES NOT MEASURE 1" @ 22x34 OR 1/2" @ 11x17, THEN DRAWING IS NOT TO SCALE - SCALE ACCORDINGLY

Anaergia
Fueling a Sustainable World™

The entire content of this drawing and any related documents are and shall remain the intellectual property of Anaergia, Inc., and shall not be used for any commercial or noncommercial purpose except as authorized in written agreement with or other written consent granted by said company. This drawing and all related documents are protected in all forms not known or hereafter developed. Users may not copy, download, use or re-transmit any portion of such drawing or related documents, except as authorized in a written agreement with or other written consent granted by said company.

DRAWN: MP
CHECKED: AD
APPROVED: AD AD
PROJ. MANAGER: ASD
STATUS:
FILE NAME: 0182 A005 01

RIVERSIDE PUBLIC WORKS
DIGESTER 5 REBAB
5950 ACORN ST, RIVERSIDE, CA 92504
ABBREVIATIONS

DRAWING NUMBER
RIVERSIDE
SHEET L1 OF L4
REV D0

EQUIPMENT AND VALVE TAG ABBREVIATIONS

TAG NUMBER WW-XXYZZA

WW: EQUIPMENT ABBREVIATION
XX: PROCESS BLOCK
Y: PROCESS BLOCK UNIT NUMBER

ZZ: SEQUENTIAL NUMBER FOR THAT BLOCK AND TYPE OF EQUIPMENT OR INSTRUMENT
A: ALPHA CHARACTER DENOTING REDUNDANT EQUIPMENT OR ALTERNATE TRAINS

EQUIPMENT ABBREVIATIONS

A	COMPRESSOR
AH	ACCESS HATCH
AS	ANNULAR SEAL
AUG	AUGER
BIN	BIN
BIO	BIOFILTER
BL	BLOWER
BNR	BURNER
BOI	BOILER
CC	CALIBRATION COLUMN
CE	CENTRIFUGE
CH	CHILLER/DEHUMIDIFICATION
CHP	COMBINED HEAT AND POWER
CHT	CHUTE
CMP	COMPACTOR
CON	CONVEYOR
CR	CRANE/HOIST
CRM	CRUMBLER
CT	COOLING TOWER
CYL	CYLINDER
DC	DYNAMIC CYCLONE
DF	DIFFUSER
DR	DRYER
DRN	DRAIN
DS	DIAPHRAGM SEAL
DT	DRIP TRAP
EJT	EJECTOR
EVA	EVAPORATOR
EXP	EXPANSION VESSEL
FA	FLAME ARRESTOR
FC	FLEX COUPLING
FDR	FEEDER (LIVE BOTTOM BIN)
FL	EMERGENCY FLARE
FLO	FLOCCULATOR
FN	FAN
FSP	UTS SEPARATOR
FT	FILTER
GE	GENERATOR
GT	GATE
H	HOPPER
HE	HEATER
HM	HAMMER MILL
HD	HYDRAULIC DRIVE UNIT
HPU	HYDRAULIC POWER UNIT
HT	HEAT TRACING
HX	HEAT EXCHANGER
HYD	HYDROCYCLONE
INJ	INJECTOR
LCP	LOCAL CONTROL PANEL
M	MOTOR
MBR	MEMBRANE (FIBRACAST)
MC	MEMBRANE TANK COVER
MD	METERING DRUM
MS	METAL SEPARATOR
MX	MIXER
ORX	OREX PRESS
OPS	ORGANICS POLISHING SYSTEM
P	PUMP
PD	PULSATION DAMPENER
PKG	PACKAGE
PMU	POLYMER MAKEUP UNIT
RTM	ROTAMETER
SB	SERVICE BOX
SCB	SCRUBBER
SCN	SCREEN
SEP	SEPARATOR (UTS FSP)
SG	SIGHT GLASS
SH	SHREDDER
SI	SILENCER
SKD	SKID
SP	SCREW PRESS
SSD	SLUDGE SCREW DEWATERED
SST	SLUDGE SCREW THICKENER
STR	STRAINER
SUMP	SUMP
THK	THICKENER
TK	TANK
TO	THERMAL OXIDIZER

PROJECT SPECIFIC EQUIPMENT

TSV	TELESCOPING VALVE
R	ROOF

VALVE ABBREVIATIONS

ARV	AIR RELEASE VALVE
AV	AUTOMATIC VALVE
AVR	AIR AND VACUUM RELEASE VALVE
BFP	BACK FLOW PREVENTER
BPV	BACK PRESSURE VALVE
CV	CHECK VALVE
EV	ELECTRICAL VALVE
FCV	FLOW CONTROL VALVE
FLT	FLOAT VALVE
MV	MANUAL VALVE
PRV	PRESSURE REGULATING VALVE
PSV	PRESSURE RELIEF VALVE
RV	ROTARY VALVE
SHV	SHEAR VALVE
SV	SOLENOID VALVE
TCV	TEMPERATURE CONTROL VALVE
TWV	THREE WAY VALVE/DIVERTER
WCV	WEIGHTED CHECK VALVE
WSV	WEIGHTED SHEAR VALVE

PROCESS BLOCK NUMBERING

BLOCK NUMBERING

PLANT-WIDE & UTILITES:

00	POTABLE & UTILITY WATER
01	COMPRESSED AIR
02	NATURAL GAS
03	SEWER/STORM WATER
04	HOT/COLD WATER
05	ODOR CONTROL
06	POLYMER/CHEMICALS
07	RESERVED
08	RESERVED
09	RESERVED

RECEPTION:

10	SCALE
11	RECEIVING STATION
12	RECEPTION TANK
13	RECEPTION PIT
14	RECEIVING BIN
15	FEEDING HOPPER
16	STORAGE SILOS/BUNKERS
17	TRUCK WASHING STATION
18	RESERVED
19	RESERVED

PRETREATMENT/PREPROCESSING:

20	FEEDER
21	BAG OPENER/SHREDDER
22	SCREENING
23	SEPARATION
24	SORTING
25	OREX
26	RECYCLABLES MANAGEMENT
27	TRANSFER AND REJECT TREATMENT
28	RESERVED
29	RESERVED

FEEDSTOCK CONDITIONING:

30	LIQUID/SOLID HOMOGENIZATION
31	PARTICLE SIZE REDUCTION
32	PRE-THICKENING
33	CLEANREX (PLASTIC & FILM REMOVAL)
34	GRITREX (GRIT REMOVAL)
35	RESIDUAL PROCESSING
36	THERMAL PRETREATMENT
37	RESERVED
38	RESERVED
39	RESERVED

DIGESTION:

40	BUFFER TANK
41	ANAEROBIC DIGESTER - PRIMARY
42	ANAEROBIC DIGESTER - SECONDARY
43	ANAEROBIC DIGESTER - TERTIARY
44	PASTEURIZATION (POST AD)
45	HYGENATION
46	DIGESTATE STORAGE
47	RESERVED
48	RESERVED
49	RESERVED

SOLIDS SEPARATION & LOADOUT:

50	SLUDGE SCREENING
51	LIQUID/SOLID SEPARATION
52	DEWATERED CAKE STORAGE
53	FILTRATE STORAGE TANK
54	PASTEURIZATION (FILTRATE)
55	RESERVED
56	RESERVED
57	RESERVED
58	RESERVED
59	RESERVED

FILTRATE MANAGEMENT:

60	WASTEWATER PRETREATMENT
61	AMMONIA RECOVERY (AMR)
62	BIOLOGICAL TREATMENT
63	MBR
64	SOLIDS SEPARATION
65	RO SYSTEM
66	BRINE MANAGEMENT
67	EFFLUENT STORAGE & DISCHARGE
68	RESERVED
69	RESERVED

BIOGAS CONDITIONING & UTILIZATION:

70	BIOGAS STORAGE
71	H2S REMOVAL
72	BIOGAS BOOSTER & AFTER COOLER & DEHYDRATION
73	BIOGAS POLISHING
74	BUG
75	GRID ENTRY UNIT
76	FLARE + TAIL GAS TREATMENT
77	BIOGAS ULITIZATION
78	RESERVED
79	RESERVED

SOLIDS MANAGEMENT:

80	DRYER
81	DRIED SOLIDS STORAGE
82	SOLIDS LOADOUT
83	COMPOSTING
84	PYROLYSIS
85	FERTILIZER BLENDING
86	RESERVED
87	RESERVED
88	RESERVED
89	RESERVED

PROJECT SPECIFIC:

90	RESERVED
91	RESERVED
92	RESERVED
93	RESERVED
94	RESERVED
95	RESERVED
96	RESERVED
97	RESERVED
98	RESERVED
99	RESERVED

LINE DESIGNATION

LINE IDENTIFICATION SYMBOLS

THE LINE IS IDENTIFIED BY LINE SIZE, FLUID SYMBOL, LINE NUMBER AND MATERIAL SPECIFICATION AS FOLLOWS:

E-150-PL-411.01-SAP10-2HT

- EXISTING
- LINE SIZE
- FLUID DESIGNATION
- PROCESS BLOCK OF ORIGIN
- HEAT TRACING
- INSULATION THICKNESS
- PIPING CLASS
- MATERIAL SPEC *
- SECTION NUMBER

N.B: * BASED ON ANAERGIA STD PIPING SPEC

FLUID DESIGNATION FLUID IDENTIFICATION SYMBOLS

AA	AIREATION AIR	IA	INSTRUMENT AIR
ACE	ACETIC ACID	LB	LIQUID BIOMASS
AFM	ANTI FOAMING	LCH	LEACHATE/DRAINS
AMS	AMMONIUM SULFATE	LS	LIQUID SEPARATE
AU	UTILITY AIR	LW	LIQUID WASTE
BGA	BIOGAS LOW PRESSURE	ML	MIXED LIQUOR
BGB	BIOGAS MEDIUM PRESSURE	MSW	MUNICIPAL SOLID WASTE
BGC	BIOGAS HIGH PRESSURE	N2	NITROGEN GAS
CA	COMPRESSED AIR	O2	OXYGEN GAS
CAU	SODIUM HYDROXIDE	OIL	OIL
CIT	CITRIC ACID	PER	PERMEATE
CK	DEWATER SLUDGE CAKE	PL	PROCESS LIQUOR
CL	CONDENSATE LIQUOR	POL	POLYMER SOLUTION
CO2	CARBON DIOXIDE	PW	POTABLE WATER
CON	CONDENSATE	RAS	RETURN ACTIVATED SLUDGE
CWR	COLD WATER RETURN	RJT	REJECT
CWS	COLD WATER SUPPLY	RNG	RENEWABLE NATURAL GAS
DAF	DAF FLOAT	ROC	RO CONCENTRATE
DS	DIGESTATE	ROP	RO PERMEATE
EVC	EVAPORATOR CONCENTRATE	SSA	SOLID PHASE AFTER SEPARATION
EVP	EVAPORATOR PERMEATE	SSO	SOURCE SEPARATED ORGANICS
FA	FOUL AIR	SUL	SULFURIC ACID
FBM	FRESH BIOMASS MIX	TG	TAIL GAS
FER	FERRIC/FERRUS CHLORIDE	TRE	TRACE ELEMENTS
FLT	FILTRATE	TWAS	THICKENED WAS
FW	FIRE WATER	URE	UREA
GL	GLYCERINE	UW	UTILITY WATER
HCL	HYDROCHORIC ACID	WAS	WASTE ACTIVATED SLUDGE
HSO	HIGH SOLIDS ORGANICS	WF	WET FRACTION
HWR	HOT WATER RETURN	WST	GENERIC WASTE FEEDSTOCK
HWS	HOT WATER SUPPLY		
HYP	SODIUM HYPOCHLORITE		

PROJECT SPECIFIC FLUIDS:

PIPE SPECIFICATION

SA	SST 304
SS	SST 316
PE	HDPE FOR UNDERGROUND PROCESS LINES
PG	HDPE FOR UNDERGROUND BIOGAS LINES
PX	POLYETHYLENE FOR UNDERGROUND HEATING WATER
PV	PVC
CS	CARBON STEEL
CSB	CARBON STEEL - FOR BIOGAS
SM	SST 316 - SAMPRES SYSTEM
GCS	GALVANIZED CARBON STEEL

REV NUM	DESCRIPTION	BY	DATE
D00	ISSUED FOR BID	ASD	01/19/2024
D01	RE-ISSUED FOR BID	MP	02/02/2024

ATTENTION: 0 1/2 1
IF THIS BAR DOES NOT MEASURE 1" @ 22x34 OR 1/2" @ 11x17, THEN DRAWING IS NOT TO SCALE - SCALE ACCORDINGLY

Anaergia
Fueling a Sustainable World™

The entire content of this drawing and any related documents are and shall remain the intellectual property of Anaergia, Inc., and shall not be used for any commercial or noncommercial purpose except as authorized in written agreement with or other written consent granted by said company. This drawing and all related documents are protected in all forms not known or hereafter developed. Users may not copy, download, use or re-transmit any portion of such drawing or related documents, except as authorized in a written agreement with or other written consent granted by said company.

DRAWN: MP
CHECKED: AD
APPROVED: AD AD
PROJ. MANAGER: ASD
STATUS:
FILE NAME: 0182 A005 01

RIVERSIDE PUBLIC WORKS
DIGESTER 5 REBAB
5950 ACORN ST, RIVERSIDE, CA 92504
TAGGING INFO

DRAWING NUMBER
RIVERSIDE
SHEET L2 OF L4
REV D0

VALVE SYMBOLS

- BALL VALVE
- BUTTERFLY VALVE
- KNIFE GATE VALVE
- GLOBE VALVE
- NEEDLE VALVE
- PINCH VALVE
- PLUG VALVE
- SWING CHECK VALVE
- BALL CHECK VALVE
- SPLIT DISC CHECK VALVE
- SOLENOID VALVE
- THREE-WAY VALVE
- PRESSURE CONTROL VALVE
- PRESSURE RELIEF VALVE

ACTUATOR SYMBOLS

- ELECTRIC
- PNEUMATIC
- PNEUMATIC WITH SOLENOID
- PNEUMATIC SPRING OPEN
- PNEUMATIC SPRING CLOSED
- HYDRAULIC

HEATER AND COOLDOWN SYMBOLS

- BURNER
- BURNER / COMBUSTION CHAMBER
- BOILER
- FLARE
- BELT DRYER
- DRUM DRYER
- COIL HEATER
- ELECTRIC HEATER

PUMP AND COMPRESSOR SYMBOLS

- GENERAL PUMP
- CENTRIFUGAL/ SUBMERISBLE PUMP
- DIAPHRAGM PUMP
- HOSE PUMP
- PROGRESSIVE CAVITY PUMP
- PISTON / PLUNGER PUMP
- LOBE PUMP
- GENERAL COMPRESSOR
- CENTRIFUGAL COMPRESSOR
- ROTARY COMPRESSOR
- SCREW COMPRESSOR
- BLOWER

HEAT EXCHANGER AND HEATER SYMBOLS

- FIXED TUBE BUNDLE HEAT EXCHANGER
- TUBE COIL HEAT EXCHANGER
- FLOATING-HEAD TUBE BUNDLE HEAT EXCHANGER
- U-TUBE BUNDLE HEAT EXCHANGER
- SPIRAL HEAT EXCHANGER
- GENERAL HEAT EXCHANGER
- GENERAL HEAT EXCHANGER
- FINNED TUBE HEAT EXCHANGER
- PLATE HEAT EXCHANGER

CONVEYOR SYMBOLS

- SCREW CONVEYOR
- BELT CONVEYOR
- GENERAL CONVEYOR
- METAL SEPARATOR

MIXER AND STRAINER SYMBOLS

- MIXER
- STATIC MIXER
- SCREW MIXER
- Y STRAINER
- SHREDDER
- SCRUBBER/DEMISTER
- MEMBRANE MODULE

TRUCKS AND CRUMBLER

- TANKER TRUCK
- OFF LOADING DUMP TRUCK
- LOADING DUMP TRUCK
- FRONT END LOADER/BOBCAT
- GENERAL CRUMBLER
- HAMMER CRUMBLER
- IMPACT CRUMBLER
- ROLLER CRUMBLER

MISCELLANEOUS SYMBOLS

- BLIND FLANGE OR CLEAN OUT
- FLANGE
- HOSE CONNECTION
- CAMLOCK / QUICK COUPLING
- EJECTOR
- INJECTOR
- DIAPHRAGM SEAL
- ANNULAR SEAL
- GENERATOR
- ELECTRIC MOTOR

REV NUM	DESCRIPTION	BY	DATE
D00	ISSUED FOR BID	ASD	01/19/2024
D01	RE-ISSUED FOR BID	MP	02/02/2024

ATTENTION: 0 1/2 1
IF THIS BAR DOES NOT MEASURE 1" @ 22x34 OR 1/2" @ 11x17, THEN DRAWING IS NOT TO SCALE - SCALE ACCORDINGLY

Anaergia
Fueling a Sustainable World

The entire content of this drawing and any related documents are and shall remain the intellectual property of Anaergia, Inc., and shall not be used for any commercial or noncommercial purpose except as authorized in written agreement with or other written consent granted by said company. This drawing and all related documents are protected in all forms not known or hereafter developed. Users may not copy, download, use or re-transmit any portion of such drawing or related documents, except as authorized in a written agreement with or other written consent granted by said company.

DRAWN: MP
CHECKED: AD
APPROVED: AD AD
PROJ. MANAGER: ASD
STATUS:
FILE NAME: 0182 A005 01

RIVERSIDE PUBLIC WORKS
DIGESTER 5 REBAB
5950 ACORN ST, RIVERSIDE, CA 92504
SYMBOLS

DRAWING NUMBER
RIVERSIDE
SHEET L3 OF L4
REV D0

MISCELLANEOUS SYMBOLS CONTINUED

- CONCENTRIC REDUCER
- SIGHT GLASS
- FLEX COUPLING / EXPANSION JOINT
- FLAME ARRESTOR
- P-TRAP
- CLEANOUT
- SAMPLING PORT
- TIE POINT
- CLASSIFICATION CHANGE
- LEVEL INDICATION
- SUCTION DIFFUSER
- DIFFUSER
- HOOD
- DRAIN
- FAN
- SILENCER
- VENT
- FILTERED VENT
- FILTER
- LIQUID FILTER
- GAS FILTER
- CYLINDER
- HOSE BIBB
- SERVICE BOX
- EVAPORATOR
- FLOCCULATOR
- COOLING TOWER
- ACCESS HATCH/ MANHOLE
- ROLL UP DOOR
- CRANE

PROCESS SYMBOLS

- HOPPER WITH SCREW CONVEYOR
- DYNAMIC CYCLONE
- FEEDER
- FLIP FLOP SCREEN
- HOPPER
- SCRUBBER
- IN-LINE GRINDER
- HYDROCYCLONE
- CHP
- OREX

REV NUM	DESCRIPTION	BY	DATE
D00	ISSUED FOR BID	ASD	01/19/2024
D01	RE-ISSUED FOR BID	MP	02/02/2024

ATTENTION: 0 1/2 1
IF THIS BAR DOES NOT MEASURE 1" @ 22x34 OR 1/2" @ 11x17, THEN DRAWING IS NOT TO SCALE - SCALE ACCORDINGLY

Anaergia
Fueling a Sustainable World

The entire content of this drawing and any related documents are and shall remain the intellectual property of Anaergia, Inc., and shall not be used for any commercial or noncommercial purpose except as authorized in written agreement with or other written consent granted by said company. This drawing and all related documents are protected in all forms not known or hereafter developed. Users may not copy, download, use or re-transmit any portion of such drawing or related documents, except as authorized in a written agreement with or other written consent granted by said company.

DRAWN: MP
CHECKED: AD
APPROVED: AD AD
PROJ. MANAGER: ASD
STATUS:
FILE NAME: 0182 A005 01

RIVERSIDE PUBLIC WORKS
DIGESTER 5 REBAB
5950 ACORN ST, RIVERSIDE, CA 92504
SYMBOLS

DRAWING NUMBER
RIVERSIDE
SHEET L4 OF L4
REV D0

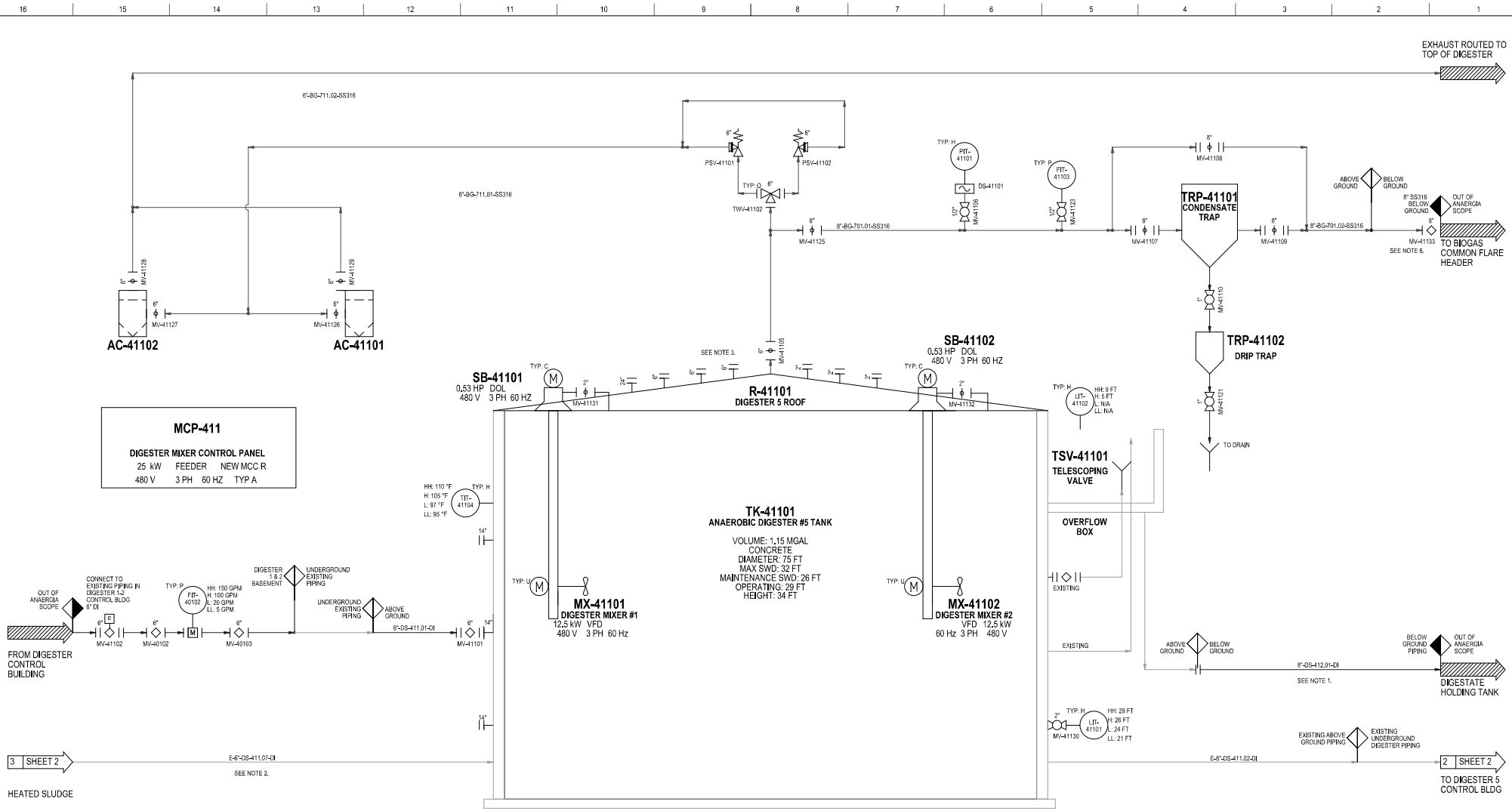

NOTES:
1) PIPE LINE 411.02 REQUIRES A PRESURE TEST.
2) LINE 411.07 TO BE CLEANED AND PRESSURE TESTED.
3) FLANGES ON ROOF OF DIGESTER 5 ARE CL150.
6) MV-41133 IS BURRIES WITH A NUT.

REV NUM	DESCRIPTION	BY	DATE
D00	ISSUED FOR BID	ASD	01/19/2024
D01	RE-ISSUED FOR BID	MP	02/02/2024

ATTENTION: 0 1/2 1
IF THIS BAR DOES NOT MEASURE 1" @ 22x34 OR 1/2" @ 11x17, THEN DRAWING IS NOT TO SCALE - SCALE ACCORDINGLY

Anaergia
Fueling a Sustainable World

The entire content of this drawing and any related documents are and shall remain the intellectual property of Anaergia, Inc., and shall not be used for any commercial or noncommercial purpose except as authorized in written agreement with or other written consent granted by said company. This drawing and all related documents are protected in all forms not known or hereafter developed. Users may not copy, download, use or re-transmit any portion of such drawing or related documents, except as authorized in a written agreement with or other written consent granted by said company.

DRAWN: MP
CHECKED: AD
APPROVED: AD AD
PROJ. MANAGER: ASD
STATUS:
FILE NAME: 0182 A005 01

RIVERSIDE PUBLIC WORKS
DIGESTER 5 REBAB
5950 ACORN ST, RIVERSIDE, CA 92504
DIGESTER 5

DRAWING NUMBER
RIVERSIDE
SHEET 1 OF 2
REV D0

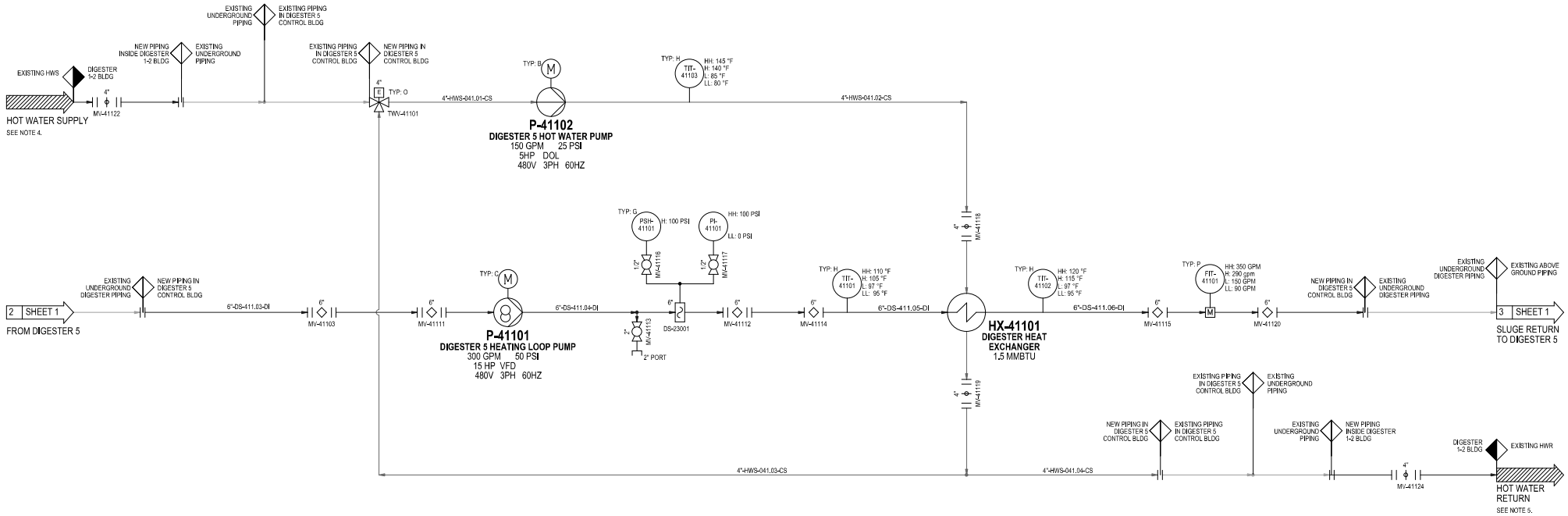

NOTES:
4) HOT WATER SUPPLY TO CONNECTION IN DIGESTER 1 & 2 BASEMENT WITH ISOLATION PLUG VALVE.
5) HOT WATER RETUN TO CONNECTION IN DIGESTER 1 & 2 BASEMENT WITH ISOLATION PLUG VALVE.

REV NUM	DESCRIPTION	BY	DATE
D00	ISSUED FOR BID	ASD	01/19/2024
D01	RE-ISSUED FOR BID	MP	02/02/2024

ATTENTION: 0 1/2 1
IF THIS BAR DOES NOT MEASURE 1" @ 22x34 OR 1/2" @ 11x17, THEN DRAWING IS NOT TO SCALE - SCALE ACCORDINGLY

Anaergia
Fueling a Sustainable World™

The entire content of this drawing and any related documents are and shall remain the intellectual property of Anaergia, Inc., and shall not be used for any commercial or noncommercial purpose except as authorized in written agreement with or other written consent granted by said company. This drawing and all related documents are protected in all forms not known or hereafter developed. Users may not copy, download, use or re-transmit any portion of such drawing or related documents, except as authorized in a written agreement with or other written consent granted by said company.

DRAWN:	MP
CHECKED:	AD
APPROVED:	AD AD
PROJ. MANAGER:	ASD
STATUS:	
FILE NAME:	0182 A005 01

RIVERSIDE PUBLIC WORKS
DIGESTER 5 REBAB
5950 ACORN ST, RIVERSIDE, CA 92504
DIGESTER 5 HEAT LOOP

DRAWING NUMBER
RIVERSIDE

SHEET 2 OF 2
REV D0

5.1.9 Sloshing Wave Height

The sloshing wave height was estimated to be 4.2 ft. Based on the available construction documents, the current freeboard available from high water elevation is approximately 2.5 ft which can result in a net upward force applied to the steel dome. This complication can be resolved by limiting the operating water height as recommended in Sections 3.1 and 3.3. Otherwise, the dome may experience damage to the steel members, dome seal, and dome anchorage at the top of the wall.

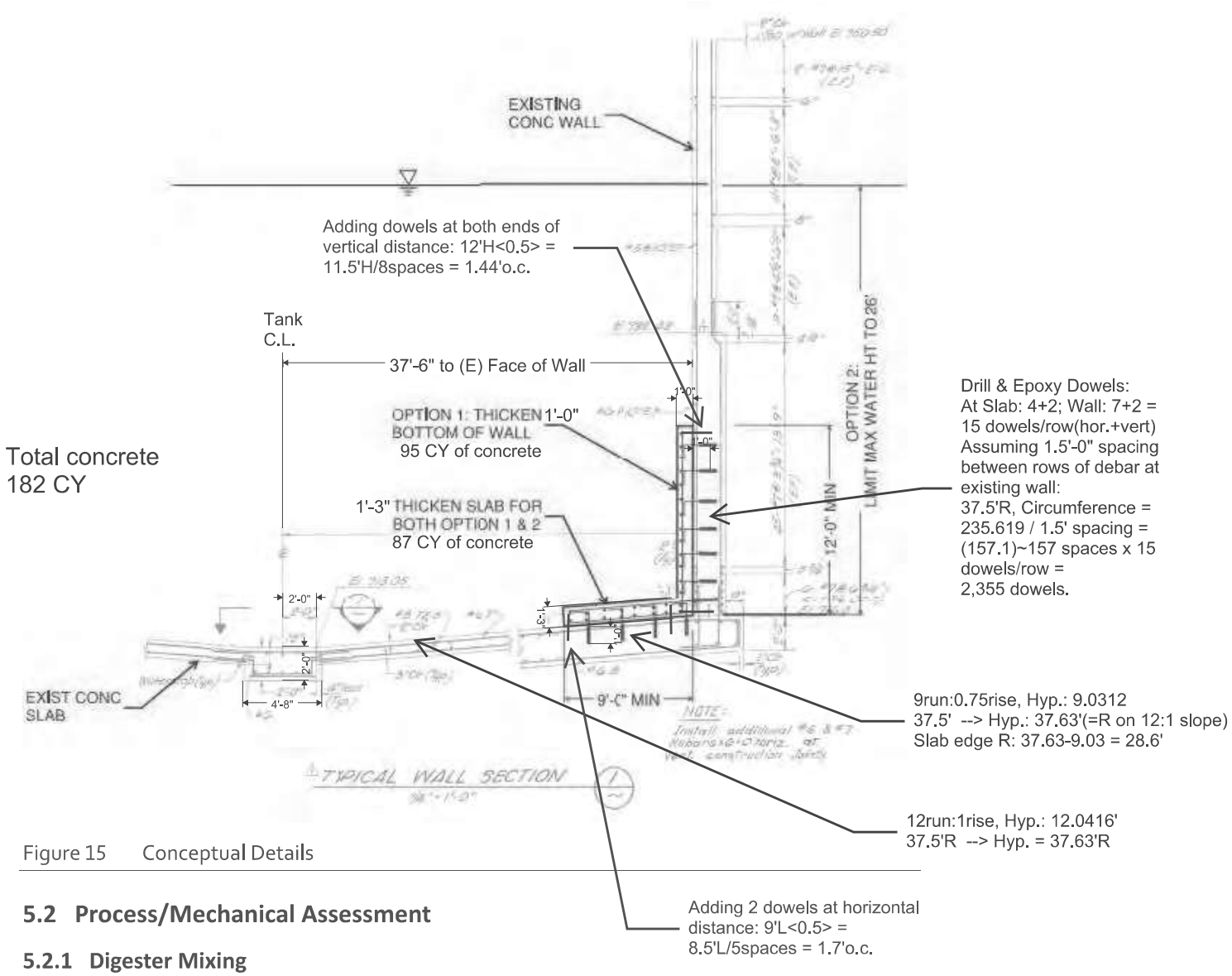

Figure 15 Conceptual Details

5.2 Process/Mechanical Assessment

5.2.1 Digester Mixing

As described in Section 3, only one Vaughn chopper pump is currently available for mixing of Digester No. 5. Since having an installed standby will require major modifications to the piping, it is recommended that an uninstalled spare pump be stored in the warehouse to allow maintenance to switch pumps in a short period in case of failure.

Currently, for pump mixing, sludge is withdrawn from the top of the digester and discharged at the bottom via nozzle. There is a top discharge nozzle to be used for breaking up scum. However,

See W.M. Lyles markups with assumptions and details in Green

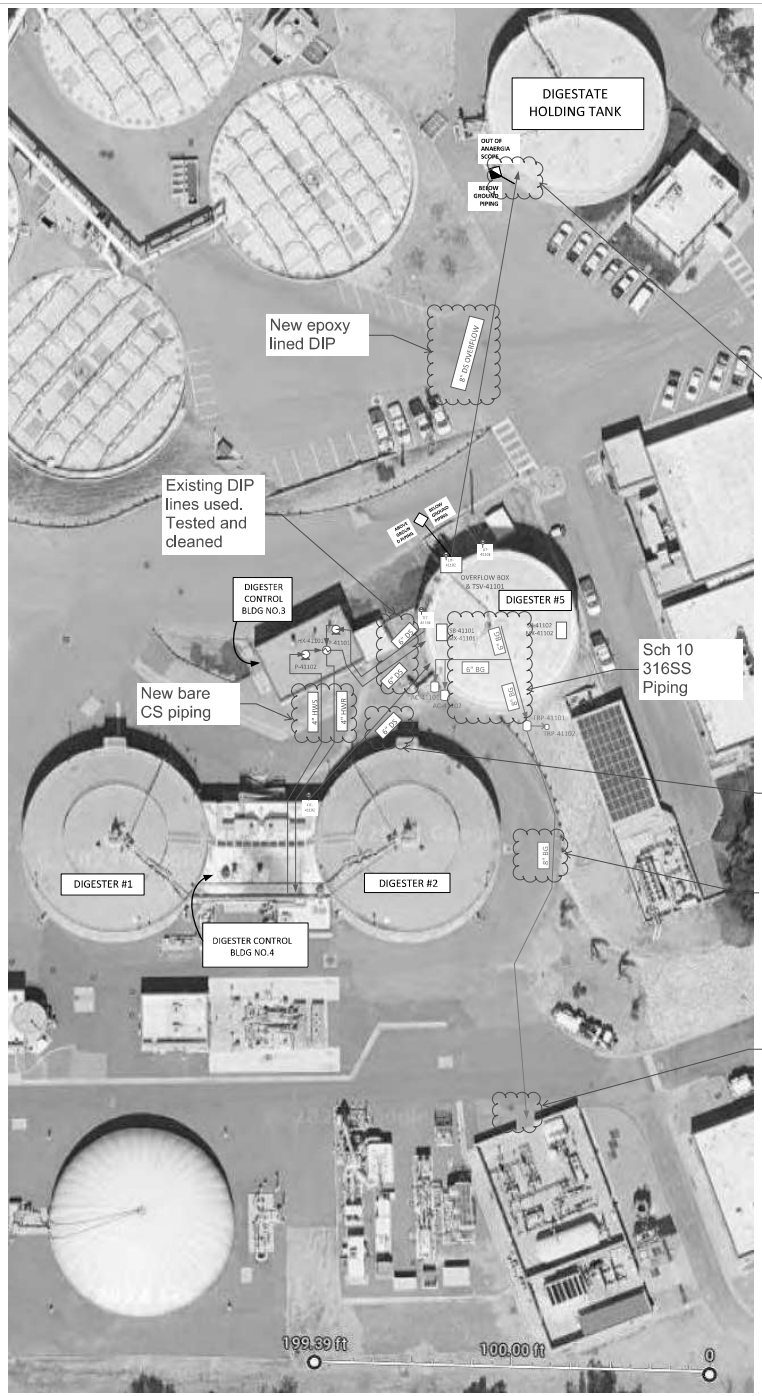

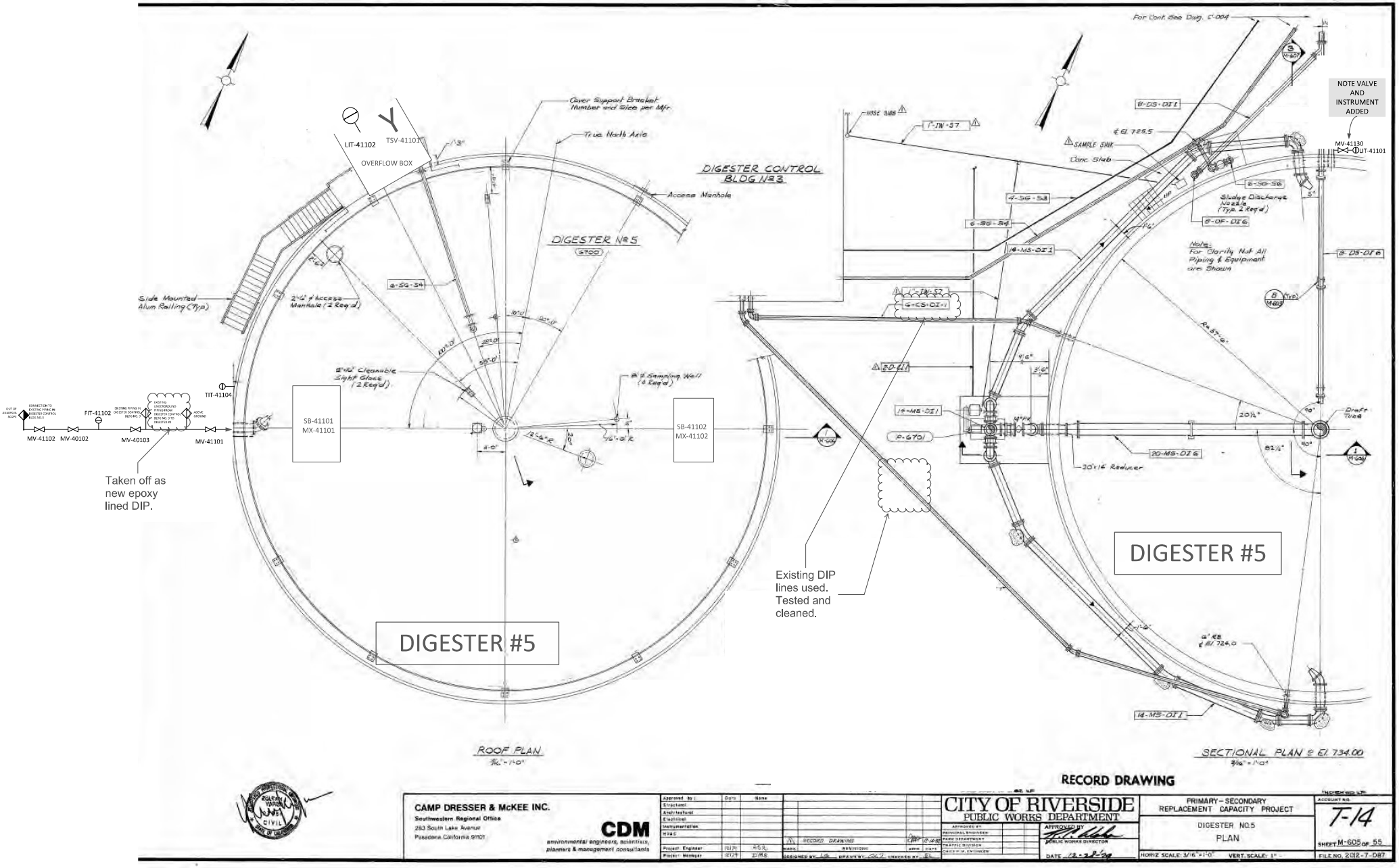
LIT-41102
TSV-41101
OVERFLOW BOX
Cover Support Bracket Number and Size per Mfr
True North Axis
DIGESTER CONTROL BLDG N23
Access Manhole
DIGESTER N25
6700
Side Mounted Alum Railing (Typ)
2'-6" ø Access Manhole (2 Req'd)
6-SG-54
8'-6" Cleanable Sight Glass (2 Req'd)
8" ø Sampling Well (4 Req'd)
TIT-41104
FIT-41102
MV-41102
MV-40102
MV-40103
MV-41101
SB-41101
MX-41101
SB-41102
MX-41102
Taken off as new epoxy lined DIP.
ROOF PLAN
3/16" = 1'-0"
For Cont See Dwg. C-004
NOTE VALVE AND INSTRUMENT ADDED
MV-41130
LIT-41101
8-DS-DI1
℄ El. 725.5
SAMPLE SINK
Conc. Slab
6-SG-56
Sludge Discharge Nozzle (Typ. 2 Req'd)
8-OF-DI6
4-SG-53
6-SG-54
14-MS-DI1
Note: For Clarity Not All Piping & Equipment are Shown
8-DS-DI6
6-CS-DI-1
20-DI1
14-MS-DI1
P-6701
20-MS-DI6
30"x16" Reducer
Draft Tube
20½"
82½"
R=57'-6"
14-MS-DI1
Existing DIP lines used. Tested and cleaned.
DIGESTER #5
DIGESTER #5
SECTIONAL PLAN @ El. 734.00
3/16" = 1'-0"
RECORD DRAWING
CAMP DRESSER & McKEE INC.
Southwestern Regional Office
283 South Lake Avenue
Pasadena, California 91101
CDM
environmental engineers, scientists, planners & management consultants
CITY OF RIVERSIDE
PUBLIC WORKS DEPARTMENT
PRIMARY – SECONDARY REPLACEMENT CAPACITY PROJECT
DIGESTER NO.5
PLAN
T-14
SHEET M-605 OF 55
FILE NO. 2012-7-087
HORIZ. SCALE: 3/16" = 1'-0"
VERT. SCALE: 1" =
DATE 12-28-90
RECORD DRAWING
DESIGNED BY
DRAWN BY
CHECKED BY

DIGESTER CONTROL BLDG NO.3

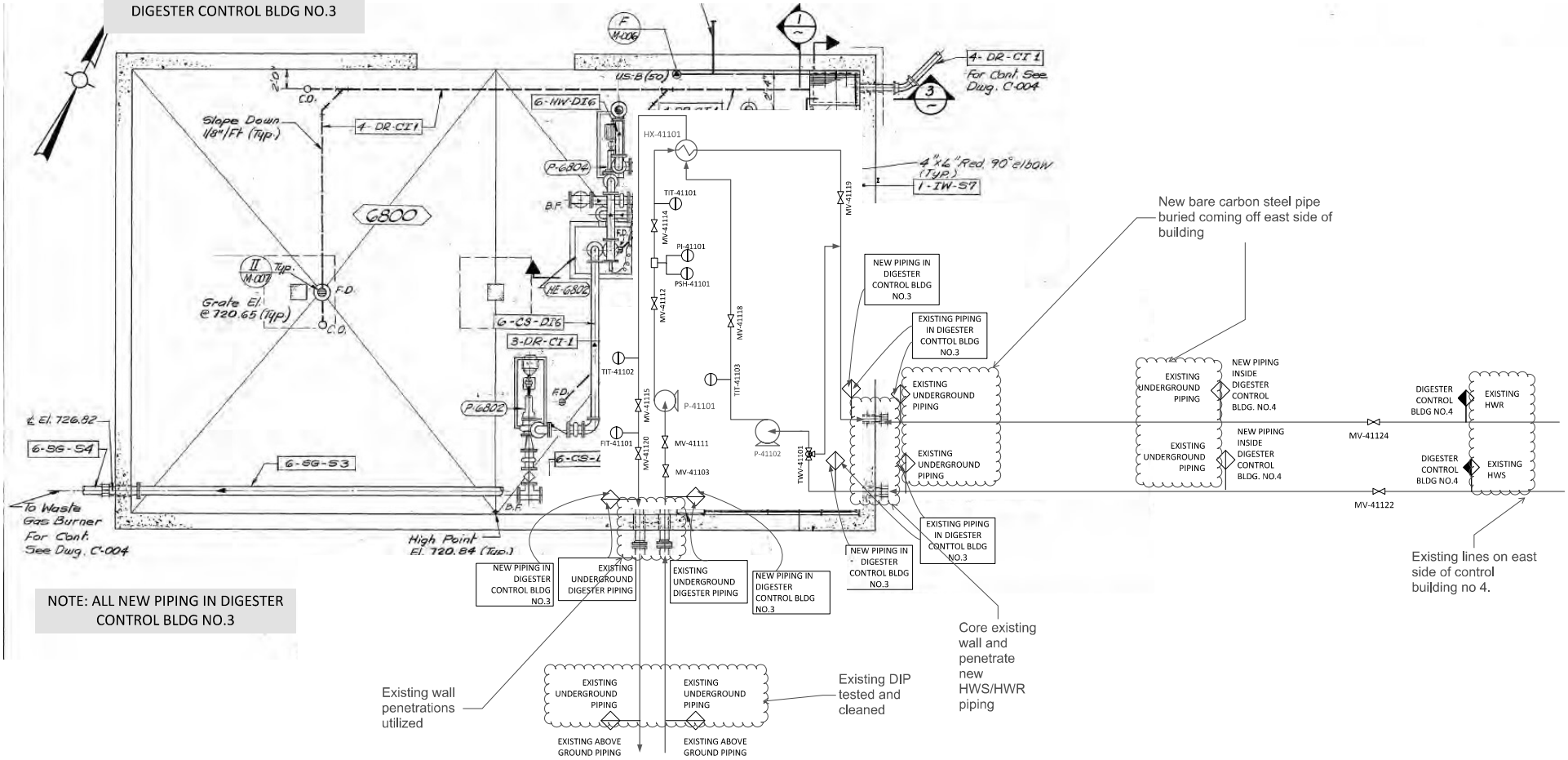

New bare carbon steel pipe buried coming off east side of building

Existing lines on east side of control building no 4.

Core existing wall and penetrate new HWS/HWR piping

Existing DIP tested and cleaned

Existing wall penetrations utilized

NOTE: ALL NEW PIPING IN DIGESTER CONTROL BLDG NO.3

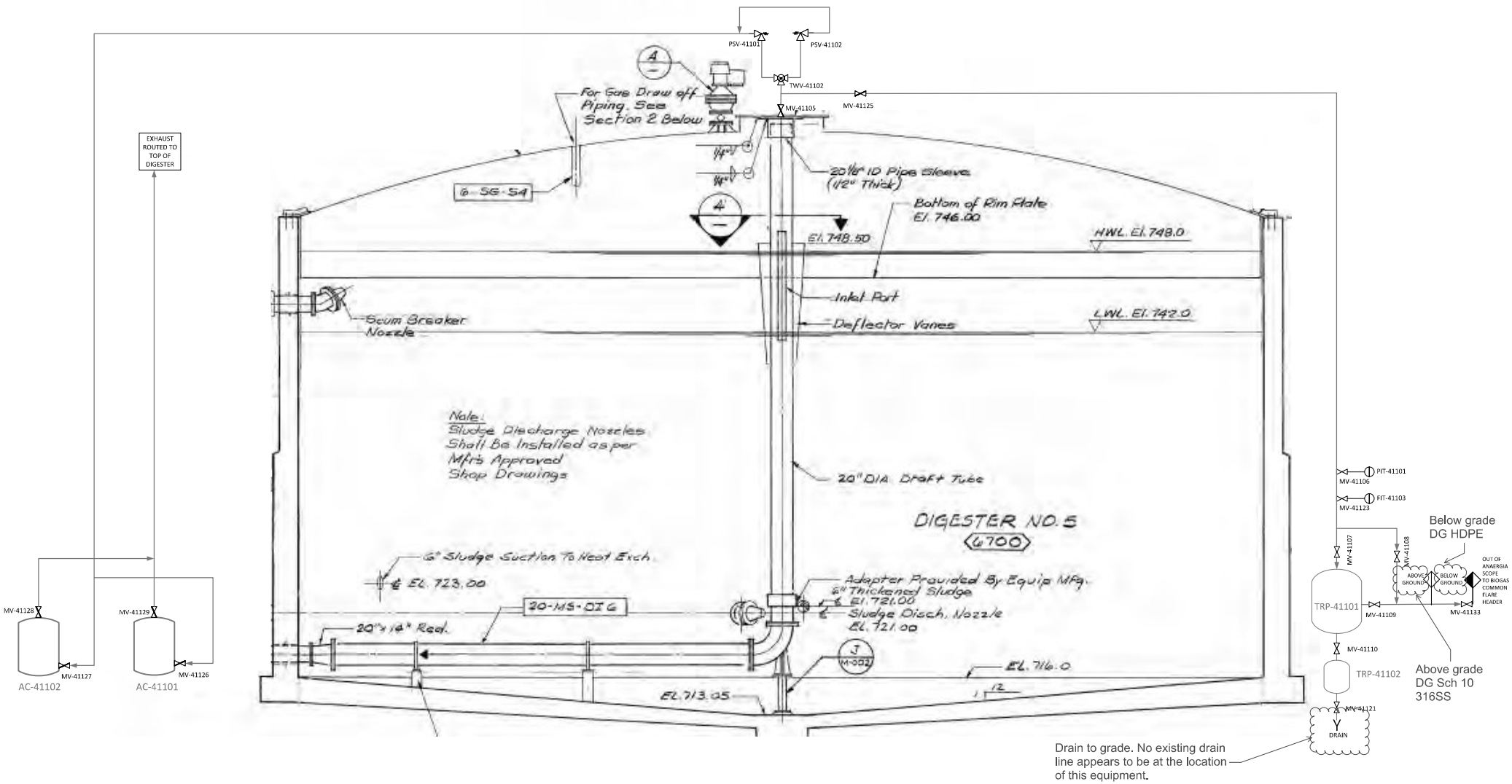
PSV-41101
PSV-41102
TWV-41102
MV-41105
MV-41125
For Gas Draw off Piping. See Section 2 Below
EXHAUST ROUTED TO TOP OF DIGESTER
6-SG-54
20 1/8" ID Pipe Sleeve (1/2" Thick)
Bottom of Rim Plate El. 746.00
El. 748.50
HWL. El. 748.0
Inlet Port
Scum Breaker Nozzle
Deflector Vanes
LWL. El. 742.0
Note: Sludge Discharge Nozzles Shall Be Installed as per Mfrs Approved Shop Drawings
20" DIA. Draft Tube
DIGESTER NO. 5
6700
6" Sludge Suction To Heat Exch.
℄ EL. 723.00
Adapter Provided By Equip Mfg. 6" Thickened Sludge
℄ El. 721.00
Sludge Disch. Nozzle EL. 721.00
20-MS-01G
20"x14" Red.
EL. 716.0
EL. 713.05
MV-41128
MV-41127
MV-41129
MV-41126
AC-41102
AC-41101
PIT-41101
MV-41106
FIT-41103
MV-41123
MV-41107
MV-41108
Below grade DG HDPE
OUT OF ANAERGIA SCOPE TO BIOGAS COMMON FLARE HEADER
ABOVE GROUND
BELOW GROUND
TRP-41101
MV-41109
MV-41133
MV-41110
TRP-41102
Above grade DG Sch 10 316SS
MV-41121
DRAIN
Drain to grade. No existing drain line appears to be at the location of this equipment.

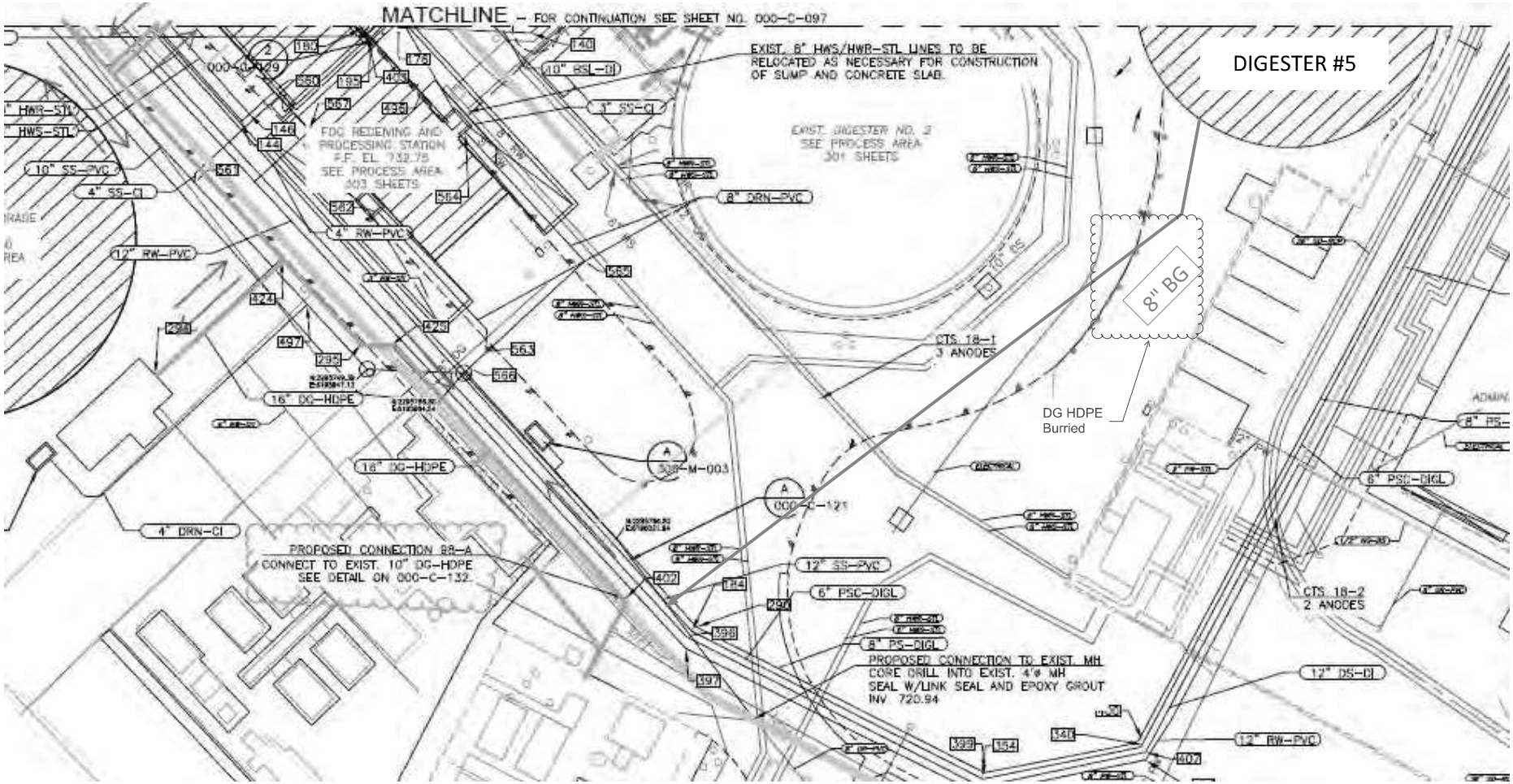
MATCHLINE – FOR CONTINUATION SEE SHEET NO. 000-C-097
DIGESTER #5
EXIST. 8" HWS/HWR-STL LINES TO BE RELOCATED AS NECESSARY FOR CONSTRUCTION OF SUMP AND CONCRETE SLAB.
EXIST. DIGESTER NO. 2
SEE PROCESS AREA
301 SHEETS
FDC REDENING AND PROCESSING STATION
F.F. EL. 732.75
SEE PROCESS AREA
303 SHEETS
8" BG
DG HDPE
Burried
CTS 18-1
3 ANODES
CTS 18-2
2 ANODES
PROPOSED CONNECTION 88-A
CONNECT TO EXIST. 10" DG-HDPE
SEE DETAIL ON 000-C-132
PROPOSED CONNECTION TO EXIST. MH
CORE DRILL INTO EXIST. 4'ø MH
SEAL W/LINK SEAL AND EPOXY GROUT
INV. 720.94
10" SS-PVC
4" SS-CI
12" RW-PVC
4" RW-PVC
8" DRN-PVC
16" DG-HDPE
4" DRN-CI
12" SS-PVC
6" PSC-DIGL
8" PS-DIGL
12" DS-CI
10" RSL-DI
3" SS-CI
HWR-STL
HWS-STL

Exhibit "C"

SCHEDULE OF VALUES

Item No.	Description of Work	Scheduled Value ($USD)
1	Project Management & Engineering Design	1,106,800
2	New Digester Mixers & Heat Exchangers	1,314,000
3	Sitework / Site Piping	1,033,200
4	Demolition	111,100
5	Concrete	832,200
6	Coating	529,000
7	Mixer Installation	84,200
8	Equipment	77,100
9	Digester Roof – Demo	466,300
10	Digester Roof – New Roof Dome	1,619,300
11	Piping	695,500
12	Electrical & Instrumentation	1,225,000
Subtotal		**9,093,700**
13 – Allowance*	Digester 4: Building Mechanical Upgrades	288,600
14 – Allowance**	Digester 5: Epoxy Injection / Xypex Waterproofing	125,700
TOTAL		**9,508,000**

*Item converts to lump sum upon completion of engineering design.
**Item charged as Time & Materials during this scope of work.

Exhibit "D"

PROJECT SCHEDULE

Project schedule is anticipated to be 18 months from NTP.

ID	Task Mode	Task Name	Duration	Start	Finish
1		Council Approval & NTP	5 days	Tue 6/25/24	Mon 7/1/24
2		**Riverside Digester 5 DB**	**371 days**	**Tue 7/2/24**	**Tue 12/2/25**
3		**Design**	**100 days**	**Tue 7/2/24**	**Mon 11/18/24**
4		Demolition Design	6 wks	Tue 7/2/24	Mon 8/12/24
5		Structural Design	10 wks	Tue 7/2/24	Mon 9/9/24
6		Mechanical Design	10 wks	Tue 7/30/24	Mon 10/7/24
7		Electrical Design	20 wks	Tue 7/2/24	Mon 11/18/24
8		**Procurement**	**315 days**	**Tue 7/2/24**	**Mon 9/15/25**
9		**Mixer Procurement**	**190 days**	**Tue 7/2/24**	**Mon 3/24/25**
10		Submittals - Mixer & Service Box	6 wks	Tue 7/2/24	Mon 8/12/24
11		Submittals - Mixer Post & Gas Skirt	8 wks	Tue 7/2/24	Mon 8/26/24
12		Submittals - Control Panel	10 wks	Tue 7/2/24	Mon 9/9/24
13		Submittal Approvals	2 wks	Tue 8/27/24	Mon 9/9/24
14		Fabrication	20 wks	Tue 9/10/24	Mon 1/27/25
15		Delivery	8 wks	Tue 1/28/25	Mon 3/24/25
16		**Digester Dome Procurement**	**165 days**	**Tue 7/2/24**	**Mon 2/17/25**
17		Submittals	10 wks	Tue 7/2/24	Mon 9/9/24
18		Submittal Approvals	2 wks	Tue 9/10/24	Mon 9/23/24
19		Fabrication	15 wks	Tue 9/24/24	Mon 1/6/25
20		Delivery	6 wks	Tue 1/7/25	Mon 2/17/25
21		**Electrical Procurement**	**315 days**	**Tue 7/2/24**	**Mon 9/15/25**
22		Submittals	15 wks	Tue 7/2/24	Mon 10/14/24
23		Submittal Approvals	2 wks	Tue 10/15/24	Mon 10/28/24
24		Fabrication	40 wks	Tue 10/29/24	Mon 8/4/25
25		Delivery	6 wks	Tue 8/5/25	Mon 9/15/25
26		**Below Grade Piping Procurement**	**70 days**	**Tue 7/2/24**	**Mon 10/7/24**
27		Submittals	6 wks	Tue 7/2/24	Mon 8/12/24
28		Submittal Approvals	2 wks	Tue 8/13/24	Mon 8/26/24
29		Lead Time	6 wks	Tue 8/27/24	Mon 10/7/24
30		**Above Grade Piping Procurement**	**115 days**	**Tue 7/2/24**	**Mon 12/9/24**
31		Submittals	6 wks	Tue 7/2/24	Mon 8/12/24
32		Submittal Approvals	2 wks	Tue 8/13/24	Mon 8/26/24
33		Lead Time	15 wks	Tue 8/27/24	Mon 12/9/24
34		**Concrete & Rebar Procurement**	**60 days**	**Tue 7/2/24**	**Mon 9/23/24**
35		Submittals	6 wks	Tue 7/2/24	Mon 8/12/24
36		Submittal Approvals	2 wks	Tue 8/13/24	Mon 8/26/24
37		Lead time	4 wks	Tue 8/27/24	Mon 9/23/24

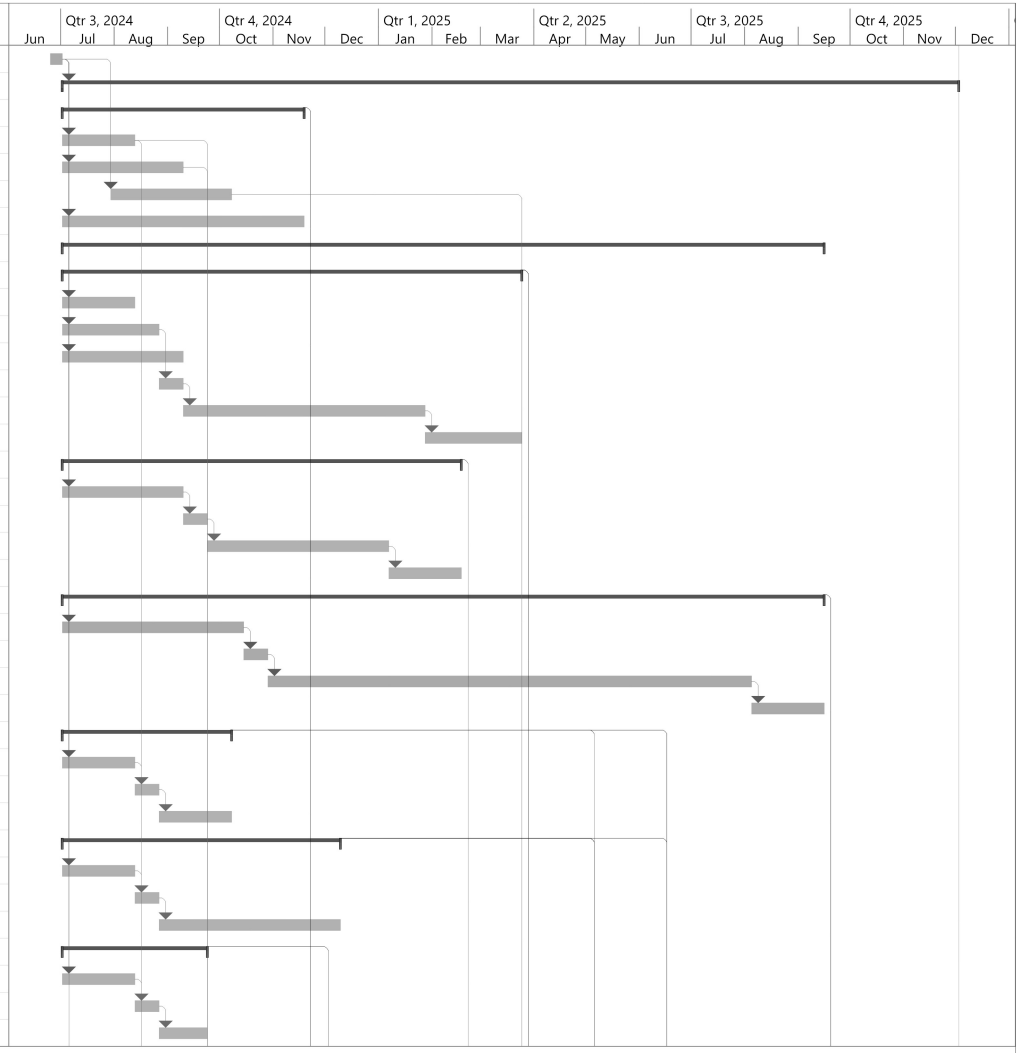

Project: Riverside Dig 5 - Sched
Date: April 2024

Task | Split | Milestone | Summary | Project Summary | Inactive Task | Inactive Milestone | Inactive Summary | Manual Task | Duration-only | Manual Summary Rollup | Manual Summary | Start-only | Finish-only | External Tasks | External Milestone | Deadline | Critical | Critical Split | Progress | Manual Progress

ID	Task Mode	Task Name	Duration	Start	Finish
38		Concrete Coating Procurement	10 wks	Tue 7/2/24	Mon 9/9/24
39		**Construction**	**370 days**	**Tue 7/2/24**	**Mon 12/1/25**
40		Mobilization	2 wks	Tue 7/2/24	Mon 7/15/24
41		Potholing & Investigations	8 wks	Tue 7/16/24	Mon 9/9/24
42		Underground Piping Site Work	15 wks	Tue 11/19/24	Mon 3/3/25
43		**Digester No. 5**	**220 days**	**Tue 8/13/24**	**Mon 6/16/25**
44		Existing Dome Demolition	6 wks	Tue 8/13/24	Mon 9/23/24
45		Concrete Coating (Upper)	10 wks	Tue 9/24/24	Mon 12/2/24
46		Concrete Reinforcement (Footing/Wall)	10 wks	Tue 12/3/24	Mon 2/10/25
47		Digester Dome Installation	10 days	Tue 2/18/25	Mon 3/3/25
48		Equipment Installation (Mixers)	6 wks	Tue 3/25/25	Mon 5/5/25
49		Gas Piping Installation	6 wks	Tue 5/6/25	Mon 6/16/25
50		**Digester Control Building No. 3**	**270 days**	**Tue 9/24/24**	**Mon 10/6/25**
51		Existing Pipe & Equipment Demolition	6 wks	Tue 9/24/24	Mon 11/4/24
52		Heat Exchangers & Pump Installation	6 wks	Tue 3/25/25	Mon 5/5/25
53		Piping & Support Installation	6 wks	Tue 5/6/25	Mon 6/16/25
54		Electrical Conduit, Wire, Terminations	10 wks	Tue 6/17/25	Mon 8/25/25
55		Set MCC & Terminate	3 wks	Tue 9/16/25	Mon 10/6/25
56		**Digester Control Building No. 4**	**50 days**	**Tue 6/17/25**	**Mon 8/25/25**
57		Piping & Support Installation	10 wks	Tue 6/17/25	Mon 8/25/25
58		Testing	8 wks	Tue 10/7/25	Mon 12/1/25
59		Substantial Completion	1 day	Tue 12/2/25	Tue 12/2/25

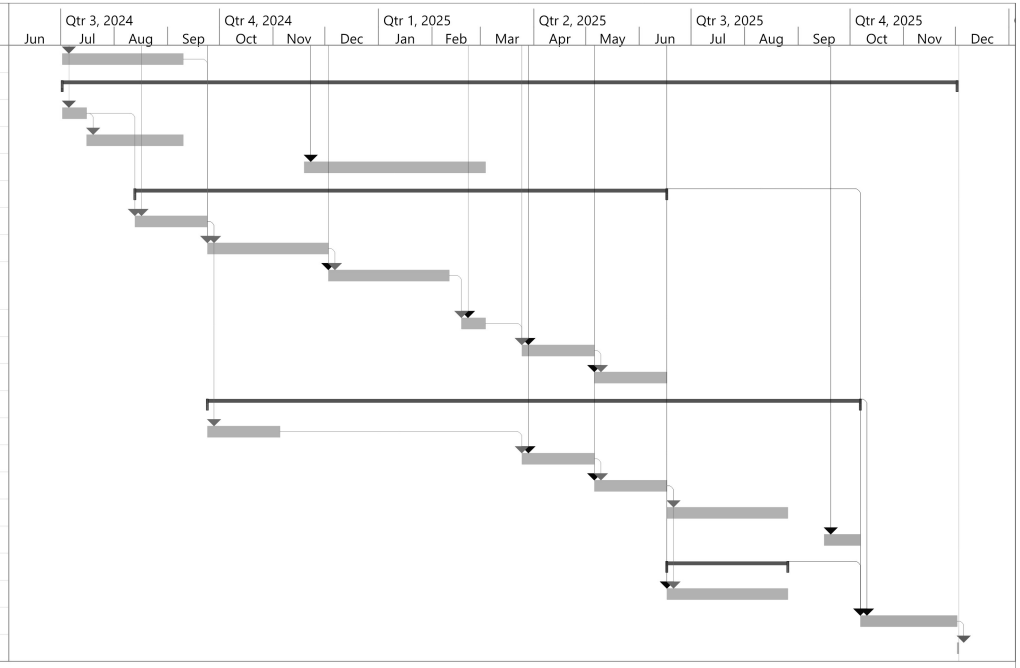

Project: Riverside Dig 5 - Sched
Date: April 2024

Task	Inactive Task	Manual Summary Rollup	External Milestone	Manual Progress
Split	Inactive Milestone	Manual Summary	Deadline	
Milestone	Inactive Summary	Start-only	Critical	
Summary	Manual Task	Finish-only	Critical Split	
Project Summary	Duration-only	External Tasks	Progress	

Exhibit "E"

SUBSTANTIAL COMPLETION

Substantial completion shall be achieved upon successful completion of testing that demonstrates Digester 5 system functionality:

- Hydrostatic testing with water
- Functional testing of mixers with clean water
- Heat exchanger testing
- Dome pressure testing

If for any reason beyond the control or responsibility of the Design-Build Entity, the Substantial Completion testing cannot be carried out within thirty (30) days of completion of Scope of Work, the Scope of Work shall be deemed complete, and City shall release final payment(s) due to the Design-Build Entity.

PERFORMANCE BOND

Bond No.

Premium:

KNOW ALL PERSONS BY THESE PRESENTS THAT:

WHEREAS, on **_____, 20____**, the CITY OF RIVERSIDE ("CITY") awarded to **[**Insert Name of DESIGN BUILD ENTITY**], [**Insert business entity type,** ***for example: a California corporation, a limited partnership, a limited liability company, etc.*****], [**Insert mailing address**],** State Contractor's License No. **[**Insert Number**]**, ("PRINCIPAL") a contract for performance of the work described as **[**Insert Name of Project**]; [**Insert RFP No. _____**]** ("CONTRACT"), the terms and conditions of which are incorporated herein by reference; and

WHEREAS, the CONTRACT requires PRINCIPAL to furnish this Performance Bond ("BOND") to guarantee PRINCIPAL's faithful performance of all provisions of the CONTRACT; and

WHEREAS, _____ ("SURETY"), a corporation legally authorized to execute and furnish performance bonds as sole surety in the State of California, is willing to act as PRINCIPAL's SURETY in the making and giving of this BOND.

NOW, THEREFORE, we PRINCIPAL and SURETY hereby hold and firmly bind ourselves to pay to CITY in lawful United States currency the principal sum of **[**Insert written dollar amount,** ***for example: One Thousand Two Hundred Thirty-Four Dollars*****] [**Insert numeric amount,** ***for example: $1,234.00*****]** for which payment well and truly to be made to CITY or CITY's successors or assigns we hereby bind ourselves and our heirs, legal representatives, successors and assigns, jointly and severally, firmly by these presents.

THE CONDITION OF THIS BOND IS THAT IF PRINCIPAL or PRINCIPAL's heirs, legal representatives, successors or assigns shall in all things stand to, abide by, and well and truly keep and faithfully perform all of the covenants, conditions and promises in the CONTRACT, including its work Guaranty, and all alterations thereof made as therein provided on PRINCIPAL's part to be kept and performed at the time and in the manner specified therein, and in all respects according to their true intent and meaning, and shall indemnify and save harmless CITY and CITY's officers, employees and agents as therein specified, then this obligation shall become null and void; otherwise, it shall be and remain in full force and binding effect.

SURETY hereby agrees that no change in the terms of the CONTRACT or the work to be performed thereunder, or any extension of time for completion thereof, shall in any way relieve it of its obligations under this BOND, and hereby waives notice of any change or extension thereof, and further waives the provisions of California Civil Code sections 2819 and 2845.

IN WITNESS WHEREOF, we sign and seal this BOND on _____, 20____.

Correspondence or claims relating to this BOND should be sent to SURETY at the following address:

_____

_____

_____

_____

_____

Telephone Number _____

_

Note: Signatures of those executing for SURETY must be acknowledged, and a Power of Attorney attached.

[Insert Name of DESIGN BUILD ENTITY**],**
Principal

By _____ (Seal)

_____
Typed Name and Title

_____
Surety

_____(Seal)
Attorney-In-Fact

_____

Typed Name and Title

PAYMENT BOND

Bond No.

Premium:

KNOW ALL PERSONS BY THESE PRESENTS THAT:

WHEREAS, on **_____, 20____**, the CITY OF RIVERSIDE ("CITY") awarded to **[**Insert Name of DESIGN BUILD ENTITY**], [**Insert business entity type,** ***for example: a California corporation, a limited partnership, a limited liability company, etc.*****], [**Insert mailing address**],** State Contractor's License No. **[**Insert Number**]**, a contract for performance of the work described as **[**Insert Name of Project**]; [**Insert RFP No. _____**]** ("CONTRACT"), the terms and conditions of which are incorporated herein by reference; and

WHEREAS, the CONTRACT requires PRINCIPAL to furnish this Payment Bond ("BOND") to secure payment of the claims of persons described in California Civil Code section 3248(b); and

WHEREAS, _____ ("SURETY"), a corporation legally authorized to execute and furnish payment bonds as sole surety in the State of California, is willing to act as PRINCIPAL's SURETY in the giving of this BOND.

NOW, THEREFORE, we PRINCIPAL and SURETY hold and firmly bind ourselves unto CITY and all persons and entities described in California Civil Code section 3248(b) whose claims are not paid by PRINCIPAL in the total sum **[**Insert written dollar amount,** ***for example: One Thousand Two Hundred Thirty-Four Dollars*****] [**Insert numeric amount,** ***for example: $1,234.00*****]** for which payment well and truly to be made we bind ourselves and our heirs, legal representatives, successors and assigns, jointly and severally, firmly by these presents.

THE CONDITION OF THIS BOND IS THAT IF PRINCIPAL or PRINCIPAL's successors, assigns, or subcontractors fail to pay any of the persons described in California Civil Code section 3181, any amounts due under the California Unemployment Insurance Code with respect to work or labor performed under the CONTRACT or any amounts required to be deducted, withheld and paid over to the California Employment Development Department from the wages of employees of PRINCIPAL and PRINCIPAL's subcontractors pursuant to California Unemployment Insurance Code section 13020 with respect to such work and labor, SURETY will pay for the same in an amount not exceeding the sum stated above, plus all costs and reasonable attorney's fees awarded by any court of competent jurisdiction in any lawsuit brought upon this BOND.

THIS BOND SHALL INURE TO the benefit of all persons and entities described in California Civil Code section 3248(b) so as to give them or their assigns a right of action in any lawsuit brought upon this BOND, and is executed and filed to comply with the Public Works Payment Bond provisions of Chapter 7, Title 15, Part 4, Division 3 of the California Civil Code (commencing at Section 3247) and all amendments thereto, which provisions are incorporated herein by this reference.

IN WITNESS WHEREOF, we sign and seal this BOND on _____, 20____.

Correspondence or claims relating to this BOND should be sent to SURETY at the following address:

_____

_____

_____

_____

_____

Telephone Number _____

Note: Signatures of those executing for SURETY must be acknowledged, and a Power of Attorney attached.

.

[Insert Name of DESIGN BUILD ENTITY**],**
Principal

By _____(Seal)

_____
Typed Name and Title

_____
Surety

_____(Seal)
Attorney-In-Fact

_____
Typed Name and Title