Title Page

INTERCONNECTION FACILITIES AGREEMENT

BETWEEN

THE CITY OF RIVERSIDE

AND

SOUTHERN CALIFORNIA EDISON COMPANY

PROJECT: RIVERSIDE TRANSMISSION RELIABILITY PROJECT (TOT107)

INTERCONNECTION FACILITIES AGREEMENT BETWEEN THE CITY OF RIVERSIDE AND SOUTHERN CALIFORNIA EDISON COMPANY

TABLE OF CONTENTS

1. Parties: 2
2. Recitals: 2
3. Agreement: 4
4. Definitions: 4
5. Effective Date And Term: 7
6. Agreement Pursuant To The TO Tariff: 8
7. Creditworthiness: 8
8. Interconnection Principles: 8
9. Interconnected Operations: 12
10. Metering: 16
11. Capital Additions: 16
12. Removal Of SCE Interconnection Facilities: 16
13 Sale of Land 18
14. Charges: 17
15. Billing And Payment: 21
16. Disputes: 26
17. Audits: 26
18. Authorized Representatives: 27
19. Regulatory Authority: 28
20. No Dedication Of Facilities: 30
21. No Third Party Rights: 30
22. Assignments: 30
23. Relationship Of Parties: 30
24. Waivers: 31
25. Governing Law: 31
26. Notices: 31
27. Severability: 32
28. Confidentiality 32
29. Entire Agreement: 35
30. Amendment: 35
31. Ambiguities: 35
32. Signature Clause 35

Exhibit A Facilities Description 36
Exhibit B Facilities Cost 41
Exhibit C Engineering And Construction Payment Schedule 43
Exhibit D Wildlife Substation One-Line Diagram 43
Exhibit E Wilderness Substation One-Line Diagram 44

INTERCONNECTION FACILITIES AGREEMENT BETWEEN
THE CITY OF RIVERSIDE
AND
SOUTHERN CALIFORNIA EDISON COMPANY

1. **Parties**:

The Parties to this Interconnection Facilities Agreement are the City of Riverside, ("Riverside"), a California municipal corporation, and Southern California Edison Company ("SCE"), a California corporation, hereinafter sometimes referred to individually as "Party" and collectively as "Parties."

2. **Recitals**:

This Agreement is made with reference to the following stipulated facts, among others:

2.1. SCE is a California public utility engaged in the business of generating and transmitting electric energy in the States of Arizona, California, Nevada, and New Mexico. SCE is further engaged in the business of distributing such energy in the State of California.

2.2. Riverside is a California municipal corporation currently engaged in generating and transmitting electric energy in the States of Arizona, California, Utah, New Mexico, and Nevada.

2.3. Riverside proposes to construct a new 220/66 kV Riverside Wilderness Substation, remove approximately 280 MW of existing load currently connected to SCE's Vista Substation, reconnect such load to the new Riverside Wilderness Substation, and serve such load and future Riverside load at Riverside Wilderness Substation for a maximum capacity of 560 MW.

2.4. On December 20, 2004, Riverside submitted a request to SCE to interconnect its proposed new Riverside Wilderness Substation to SCE's electrical system at a new 220 kV SCE Wildlife Substation to be constructed by SCE, and requested that SCE loop the Mira Loma-Vista No. 1 220 kV Transmission Line into SCE's Wildlife Substation, in accordance with the terms of SCE's Transmission Owner Tariff ("TO Tariff"). Such interconnection request was received by SCE on December 27, 2004.

2.5. SCE performed a System Impact Study associated with Riverside's proposed 220 kV interconnection, and the results were transmitted to Riverside on June 18, 2005.

2.6. A Facilities Study identifying the SCE Interconnection Facilities and upgrades to SCE's electrical system needed to provide the requested service was performed by SCE, and the results were transmitted to Riverside on October 4, 2005. The Facilities Study did not identify a need for system upgrades beyond those upgrades identified herein.

2.7. The Parties entered into a Letter Agreement on April 11, 2006, which provided the terms and conditions for SCE to begin the engineering, design and preparation of specifications for the SCE Interconnection Facilities, perform studies regarding requirements for right-of-way for Wildlife Substation and the approximately 8.25 miles of double circuit transmission line required for the

interconnection with SCE's existing Vista and Mira Loma Substations, commence preparation of the Certificate of Public Convenience and Necessity ("CPCN") application and perform other work as necessary. The Letter Agreement also provides for Riverside to pay all of SCE's charges and expenses incurred for work performed by SCE pursuant to the Letter Agreement, and includes the Parties' intent that any successor agreement include terms whereby SCE shall reimburse Riverside for any costs incurred for any required network transmission facilities, if and to the extent that the FERC grants SCE rate recovery for such costs. The Letter Agreement provides that it will terminate upon the effective date of an interconnection agreement.

2.8. Riverside requested that SCE file this Agreement unexecuted and unilaterally at FERC. Therefore, this Agreement was originally filed unexecuted at FERC, was made effective on September 6, 2008 and led to the Settlement between the Parties. The Parties entered into a Settlement Agreement and this Agreement on March 9, 2009, which specified the terms for SCE to provide Interconnection service; and for SCE to (i) engineer, design, construct, install, own, operate and maintain Wildlife Substation; (ii) engineer, design, construct, install, own, operate and maintain the Mira Loma-Vista 220 kV Line Loop into Wildlife Substation; (iii) interconnect the 220/66 kV Riverside Wilderness Substation to Wildlife Substation; (iv) purchase from Riverside the land required for Wildlife Substation; and (v) reimburse Riverside for certain amounts paid to SCE pursuant to the Letter Agreement and this Agreement. In addition, this Agreement provides for Riverside to sell to SCE the land required for Wildlife Substation.

2.9. The Parties have entered into the First Amendment on August 13, 2010 to revise the IFA, including revised construction schedule and costs as a result of the revised construction schedule.

2.10. In April 2015, SCE filed an Application and an Amended Application seeking a CPCN from the California Public Utilities Commission ("CPUC") authorizing construction of Wildlife Substation, approximately 10 miles of overhead transmission facilities that would serve as the Mira Loma-Vista 220 kV Line Loop into Wildlife Substation and other associated components (collectively the "SCE Work"). Multiple agencies and organizations became parties to the CPUC proceeding regarding the CPCN.

2.11. In September 2016, SCE proposed a modified version of the SCE Work in order to avoid newly entitled development projects located in the same area. The modified proposal incorporated a hybrid design for the transmission line such that approximately 2 miles of the line would be underground while approximately 8.25 miles would be above ground, with route modifications to some of the above-ground line compared to the route originally proposed in the Application and Amended Application.

2.12. The Parties have entered into the Second Amendment on March 23, 2018, to reflect a revised construction schedule and for payment of additional costs as a result of changes in the environmental and permitting requirements.

2.13. The Parties have entered into the Third Amendment on January 15, 2019 to reflect a revised scope of work and costs.

2.14. The Parties have entered into the Fourth Amendment on xxxxxx , 2026 to revise the IFA, including revised construction schedule and costs as a result of the revised construction schedule.

3. **Agreement**:

In consideration of the premises and the mutual covenants and agreements contained herein, the Parties agree as follows:

4. **Definitions**:

All terms with initial capitalization not otherwise defined herein shall have the meanings assigned to them in the TO Tariff, as that tariff may be amended from time to time. The following terms, when used herein with initial capitalization, whether in the singular or the plural, shall have the meanings specified:

4.1. Accounting Practice: Generally accepted accounting principles and practices applicable to electric utility operations.

4.2. Agreement: This Interconnection Facilities Agreement between the City of Riverside and Southern California Edison Company.

4.3. Authorized Representative: The representative of a Party designated in accordance with Section 18.

4.4. Capital Additions: Any Units of Property which are added to the SCE Interconnection Facilities, the enlargement, modification or betterment of any Units of Property constituting a part of the SCE Interconnection Facilities; or the replacement of any Units of Property constituting a part of the SCE Interconnection Facilities, irrespective of whether such replacement constitutes an enlargement, modification or betterment of that which it replaces; the costs of which additions, enlargements, modifications, betterments or replacements in accordance with Accounting Practice would be capitalized and have not previously been included in the SCE Interconnection Facilities Cost.

4.5. Capital Additions Cost: All costs, excluding One-Time Cost, associated with the design, engineering, procurement, construction and installation of Capital Additions.

4.6. Capital Additions Payment: The sum of the Capital Additions Cost and associated One-Time Cost.

4.7. Credit Support: Parent guarantee, letter of credit, surety bond, or other security meeting the requirements of Section 14.9.

4.8. CPUC: The California Public Utilities Commission, or its regulatory successor.

4.9. Customer-Financed Monthly Rate: The rate most recently adopted by the CPUC for application to SCE's retail electric customers for customer-financed added facilities, which does not compensate SCE for replacement of added facilities. The currently effective Customer-Financed Monthly Rate is stated in Exhibit B.

4.10. Electric Reliability Organization: The North American Electric Reliability Corporation (NERC) or its successor organization.

4.11. Emergency Condition: A condition or situation: (1) that in the judgment of the Party making the claim is imminently likely to endanger life or property; or (2) that, in the case of SCE, is imminently likely (as determined in a non-

discriminatory manner) to cause a material adverse effect on the security of, or damage to, SCE's electric system, the SCE Interconnection Facilities, or the electric systems of others to which SCE's transmission system is directly connected; or (3) that, in the case of Riverside, is imminently likely (as determined in a non-discriminatory manner) to cause a material adverse effect on the security of, or damage to, the Riverside electric system or the Riverside Interconnection Facilities. System restoration and Black Start shall be considered Emergency Conditions.

4.12. FERC: Federal Energy Regulatory Commission, or its regulatory successor.

4.13. First Amendment: The First Amendment to the Agreement described in Section 2.9.

4.14. Fourth Amendment: The Fourth Amendment to the Agreement described in Section 2.14.

4.15. Governmental Authority: Any federal, state, local or other governmental, regulatory or administrative agency, court, commission, department, board, or other governmental subdivision, legislature, rulemaking board, tribunal, or other governmental authority having jurisdiction over the Parties, their respective facilities, or the respective services they provide, and exercising or entitled to exercise any administrative, executive, police, or taxing authority or power; provided, however, that such term does not include either of the Parties to this Agreement, or any affiliate thereof.

4.16. Interconnection: The interconnection of the Riverside Interconnection Facilities to SCE's electrical system, to be established in accordance with Section 8 and as shown in Exhibits D and E.

4.17. Interconnection Facilities: The SCE Interconnection Facilities or the Riverside Interconnection Facilities or both as the context may require.

4.18. ISO Controlled Facilities: Facilities, as specified in Exhibit A and as shown in Exhibit D, owned by SCE, and placed under the Operational Control of the ISO, as such facilities may be modified during the term of this Agreement.

4.19. ITCC: The Income Tax Component of Contribution specified in the Preliminary Statement, Part M of SCE's tariff on file with the CPUC, to the extent applicable to payments and transfers by Riverside to SCE for SCE Interconnection Facilities Cost and the Capital Additions Cost. The ITCC tax gross-up amount will be computed pursuant to Section 14.8.1, and the estimate of the ITCC is provided in Section 14.9.2.

4.20. Letter Agreement: That agreement described in Section 2.7 and entered into between the Parties on April 11, 2006.

4.21. Mira Loma-Vista 220 kV Line Loop: Facilities, which are part of the ISO Controlled Facilities as specified in Exhibit A and as shown in Exhibit D, owned by SCE, including, but not limited to the approximately 8.25 miles of new transmission line looping SCE's Mira Loma-Vista No. 1 220 kV Transmission Line into Wildlife Substation, thereby creating the Mira Loma-Wildlife and Vista-Wildlife 220 kV Transmission Lines, as such facilities may be modified during the term of this Agreement.

4.22. One-Time Cost: All costs associated with the installation of SCE

Interconnection Facilities and Capital Additions which are not capitalized. The SCE Interconnection Facilities One-Time Cost is provided in Exhibit B.

4.23. Point of Interconnection: The point where the 220 kV transmission lines from the Riverside Wilderness Substation interconnect with SCE's Wildlife Substation. Such Point of Interconnection is described in Sections 8.3 and 8.4 and shown in Exhibit D.

4.24. Removal Cost: The actual cost SCE incurs for the removal of the SCE Interconnection Facilities, which is calculated as the amount, if positive, of the costs of removal minus the salvage value of the SCE Interconnection Facilities.

4.25. Riverside Interconnection Facilities: All equipment and facilities comprising the Riverside Interconnection Facilities, as shown in Exhibit E, owned by Riverside to interconnect the Riverside Wilderness Substation to SCE's electrical system at Wildlife Substation, as such facilities may be modified during the term of this Agreement.

4.26. Riverside Wilderness Substation: Riverside's 220/66 kV electrical substation located adjacent to Wildlife Substation, and as shown in Exhibit E, owned by Riverside, as such facilities may be modified during the term of this Agreement.

4.27. Riverside Wilderness Substation In-Service Date: The date upon which the construction of the Riverside Wilderness Substation is complete, such facilities are successfully tested, synchronized and connected to SCE's Wildlife Substation.

4.28. SCE Interconnection Facilities: All equipment and facilities comprising the SCE Interconnection Facilities, as specified in Exhibit A and shown in Exhibit D, not placed under ISO Operational Control, owned by SCE to interconnect the Riverside Wilderness Substation to SCE's electrical system at Wildlife Substation, as such facilities may be modified during the term of this Agreement.

4.29. SCE Interconnection Facilities Charge: The monthly charge to Riverside to recover the revenue requirements, including, but not limited to, operation, maintenance, administrative and general expenses, for the SCE Interconnection Facilities, calculated as the product of the Customer-Financed Monthly Rate and the SCE Interconnection Facilities Cost. An estimate of the SCE Interconnection Facilities Charge is provided in Exhibit B.

4.30. SCE Interconnection Facilities Cost: All costs, excluding One-Time Cost, associated with the design, engineering, procurement, construction and installation of the SCE Interconnection Facilities. An estimate of the SCE Interconnection Facilities Cost is provided in Exhibit B.

4.31. SCE Interconnection Facilities Payment: The sum of the SCE Interconnection Facilities Cost and associated One-Time Cost. The SCE Interconnection Facilities Payment is provided in Exhibit B.

4.32. Second Amendment: The Second Amendment to the Agreement described in Section 2.12.

4.33. Third Amendment: The Third Amendment to the Agreement described in Section 2.13.

4.34. Units of Property: As described in FERC's "List of Units of Property for Use in Connection with Uniform System of Accounts Prescribed for Public Utilities and Licensees" in effect as of the date of this Agreement, and as such list may be

amended from time to time.

4.35. WECC: The Western Electricity Coordinating Council or its successor.

4.36. Wildlife Substation: SCE's 220 kV electrical substation located adjacent to the Riverside Wilderness Substation, including, but not limited to, the SCE Interconnection Facilities, and ISO Controlled Facilities within the Wildlife Substation, as shown in Exhibit D, as such facilities may be modified during the term of this Agreement.

4.37. Wildlife Substation In-Service Date: The date upon which the construction of the Wildlife Substation is complete and such facilities are successfully tested and ready for service.

5. **Effective Date And Term**:

5.1. This Agreement became effective upon the effective date ordered by the FERC, September 6, 2008, ("Effective Date").

5.2. Unless this Agreement is terminated pursuant to Section 13.2, 14.7 or 15.4, this Agreement shall terminate on the earliest of (i) the date specified by Riverside upon one hundred eighty (180) calendar days advance written notice to SCE if the notice of termination is received by SCE on or after the Wildlife Substation In-Service Date, or (ii) the date specified by Riverside upon thirty (30) calendar days written notice to SCE if the notice of termination is received by SCE before the Wildlife Substation In-Service Date.

5.3. Any obligations of one Party to the other, including payment obligations, as a result of this Agreement, which accrued prior to or as a result of termination of this Agreement, shall survive termination.

5.4. If Riverside has given notice of termination and a filing with FERC is required to terminate this Agreement, Riverside shall support the request for such termination before the FERC if requested to do so by SCE.

5.5. Following termination of this Agreement, Riverside shall pay SCE any remaining balance owed for SCE's costs incurred or irrevocably committed to be incurred as of the termination date (and subsequently paid by SCE) pursuant to this Agreement for the SCE Interconnection Facilities in accordance with Section 15.1.12. If this Agreement is terminated before the Wildlife Substation In-Service Date, Riverside shall also pay SCE for SCE's costs incurred or irrevocably committed to be incurred as of the termination date (and subsequently paid by SCE) for the ISO Controlled Facilities in accordance with Section 15.1.12.

5.6. Upon the Effective Date, this Agreement shall supersede the Letter Agreement, and the Letter Agreement shall be of no further force or effect, and the Agreement, including the First Amendment to the Agreement, and the Second Amendment to the Agreement shall be in effect.

6. **Agreement Pursuant To The TO Tariff**:

This Agreement governs services pursuant to the TO Tariff as such Tariff may be amended from time to time. Accordingly, the rights and obligations of the Parties pursuant to this Agreement are subject to applicable provisions of the TO Tariff,

including without limitation its provisions regarding indemnification and Uncontrollable Force, in addition to the provisions of this Agreement. In case of a conflict in the terms contained in this Agreement and the terms in the TO Tariff, the terms of this Agreement shall apply.

7. **Creditworthiness**:

For the purpose of determining the ability of Riverside to meet its obligations related to service hereunder, SCE may require reasonable credit review procedures. This review shall be made in accordance with standard commercial practices. In addition, SCE may require Riverside to provide and maintain in effect during the term of the Agreement, an unconditional and irrevocable letter of credit as security to meet its responsibilities and obligations under the Agreement, or an alternative form of security proposed by SCE and acceptable to Riverside and consistent with commercial practices established by the Uniform Commercial Code that protects SCE against the risk of non-payment. SCE will determine on a non-discriminatory basis whether security will be required since Riverside has previously established its creditworthiness pursuant to a tariff, rate schedule, or service contract for service provided by SCE, and has not defaulted on its obligation under that applicable tariff or rate schedule.

8. **Interconnection Principles**:

8.1. SCE shall design, engineer, procure, construct, install, own, operate and maintain Wildlife Substation and the Mira Loma-Vista 220 kV Line Loop pursuant to Good Utility Practice and apply for any regulatory approvals associated with these facilities.

8.2. SCE shall own and maintain the towers, poles, dead-end structures, primary conductors.

8.3. SCE shall provide at Riverside's expense and SCE shall own the conductors necessary to interconnect the Riverside Interconnection Facilities to SCE's Wildlife Substation up to but not including the jumper loops on the first dead-end structure within the Riverside Wilderness Substation.

8.4. SCE shall install on SCE's poles, towers or dead-end structures, the Riverside provided and owned conductors necessary to interconnect the Riverside Interconnection Facilities to SCE's Wildlife Substation.

8.5. Riverside, at its expense, shall engineer, design, procure, construct, install, own, operate and maintain the Riverside Wilderness Substation, 220/66 kV power transformers, meters and metering facilities, and relay protection associated with the Riverside Wilderness Substation, and the 66 kV distribution system connected to the Riverside Wilderness Substation pursuant to Good Utility Practice and apply for any regulatory approvals associated with these facilities.

8.6. Riverside, at its expense, shall remove approximately 280 MW of existing load currently connected to SCE's Vista Substation and reconnect such load to the Riverside Wilderness Substation.

8.7. The Parties shall establish the Interconnection between the Riverside Wilderness Substation and Wildlife Substation (i) by utilizing the Riverside Interconnection Facilities and the SCE Interconnection Facilities, as shown in Exhibits D and E,

as those exhibits may be modified in accordance with this Agreement, and (ii) in accordance with all applicable ISO, WECC and NERC criteria, SCE specifications, and Good Utility Practice.

8.8. Riverside shall acquire all permits and other approvals in addition to completing all environmental impact studies necessary for the construction, operation, and maintenance of the Riverside Wilderness Substation. Riverside shall include Wildlife Substation and the Mira Loma-Vista 220 kV Line Loop in all such environmental impact studies. Riverside will act as the lead California Environmental Quality Act ("CEQA") agency for the electric system upgrades specified in this Agreement, including the Riverside Wilderness Substation, Wildlife Substation, and the Mira Loma-Vista 220 kV Line Loop, in order to perform the necessary environmental review as required by CEQA. Riverside shall provide the results of such studies and approvals to SCE for use in SCE's application(s) to obtain any required regulatory approvals for the construction of SCE's facilities, including a CPCN from the CPUC. The Parties will provide information and assistance to one another as reasonably requested by the other Party in obtaining the necessary permits and regulatory approvals.

8.9. At SCE's request, Riverside shall provide to SCE electrical specifications, relevant drawings and plans pertaining to the Riverside Wilderness Substation and any portion of Riverside's distribution system which may potentially have an impact on the SCE transmission and distribution system, as reasonably determined by SCE, for SCE's review prior to beginning construction work based on such specifications, drawings and plans. Riverside shall provide to SCE reasonable advance written notice of any changes in the Riverside Wilderness Substation and provide to SCE specifications, relevant drawings and plans of any such changes for SCE's review and consent. Such consent shall not be unreasonably withheld. The Parties shall coordinate modifications to such specifications, relevant drawings and plans as necessary to allow SCE to operate its electric system in accordance with Good Utility Practice and NERC and WECC approved reliability standards.

8.10. At Riverside's request, SCE shall provide to Riverside electrical specifications, relevant drawings and plans pertaining to the Wildlife Substation and any portion of SCE's transmission system which may potentially have an impact on the Riverside distribution system for Riverside's review prior to beginning construction work based on such specifications, drawings and plans. SCE shall provide to Riverside reasonable advance written notice of any changes in the SCE Wildlife Substation and provide to Riverside specifications, relevant drawings and plans of any such changes for Riverside's review and consent. Such consent shall not be unreasonably withheld. The Parties shall coordinate modifications to such specifications, relevant drawings and plans as necessary to allow Riverside to operate its electrical system in accordance with Good Utility Practice and NERC and WECC approved reliability standards.

8.11. The Parties agree to review and consult with each other regarding the construction schedules for the Riverside Wilderness Substation and, as described in Section 2.3, the relocation of a portion of Riverside's load currently served by SCE's Vista Substation to the Riverside Wilderness Substation, Wildlife

Substation and the Mira Loma-Vista 220 kV Line Loop.

8.12. SCE shall provide notification to Riverside of receipt of an approved Certificate of Public Convenience and Necessity ("CPCN") from the California Public Utilities Commission, and SCE shall then bill Riverside pursuant to Section 15 and Exhibit C.

8.13. SCE shall have the right to inspect the Riverside Wilderness Substation and Riverside shall have the right to inspect the Wildlife Substation prior to the initial operation of each respective substation, upon advance notice. Each Party shall have the right, at such Party's option, to be present at the inspection of the other Party.

8.14. Riverside granted SCE easements for the life of the Wildlife Substation on property owned or controlled by Riverside as necessary to route the Mira Loma – Vista 220 kV Line Loop for interconnection providing for appropriate space and access rights for installation, operation, maintenance, replacement and removal of SCE required facilities at fair market value of the land as determined by a licensed appraiser. SCE and Riverside made all arrangements necessary to effectuate such easements. The appraiser was mutually agreed upon by SCE and Riverside.

8.15. SCE shall use commercially reasonable efforts to construct, successfully test and declare ready for service Wildlife Substation and the Mira Loma-Vista 220 kV Line Loop as follows:

8.15.1. CPCN approval date: On March 12,2020.

8.15.2. Wildlife Substation and the Mira Loma – Vista 220 kV Line Loop: on or before October, 2029.

8.15.3. However, Riverside understands and acknowledges that such dates are only estimates, produced without benefit of a design, and that final scope, equipment and material lead times, labor availability, outage coordination, regulatory approvals, or other unforeseen events could delay the actual in-service date beyond that specified. The Parties agree to cooperate with each other to evaluate actions that may be taken by the Parties to potentially advance the in-service date of the Wildlife Substation and the Mira Loma-Vista 220 kV Line Loop.

8.16. Riverside shall use commercially reasonable efforts to construct, successfully test and declare ready for service the Riverside Wilderness Substation on or before forty six (46) months from the Effective Date of the IFA 4th Amendment. However, SCE understands and acknowledges that such date is only an estimate, produced without benefit of a design, and that final scope, equipment and material lead times, labor availability, outage coordination, regulatory approvals, or other unforeseen events could delay the actual in-service date beyond that specified. The Parties agree to cooperate with each other to evaluate actions that may be taken by the Parties to potentially advance the in-service date of the Wilderness Substation.

8.17. The maximum capacity of the SCE Interconnection Facilities made available by SCE to Riverside for the purpose of the interconnection of the Riverside Wilderness Substation to the ISO Controlled Grid under this Agreement shall be 560 MW. Riverside acknowledges that if Riverside wishes to increase the

amount of Interconnection capacity provided pursuant to this Agreement, Riverside shall be required to provide advance notice to SCE of such proposed increase, so that SCE may study the impact to SCE's electrical system and design and install system additions or upgrades as required to accommodate such increase.

8.18. The Parties shall negotiate operating procedures which, among other things, (1) establish procedures to communicate and coordinate operations, (2) establish emergency operations, switching and clearance procedures between the Parties associated with the Riverside Wilderness Substation and the SCE Wildlife Substation, and (3) establish operating procedures associated with 66 kV load rolling between Vista Substation and Riverside Wilderness Substation. Changes to the operating procedures shall be made by mutual agreement of the Parties; provided that, if either Party proposes a change to an operating procedure with which the other Party does not agree, the disagreement shall be resolved through the dispute resolution process under Section 16. SCE shall provide to the ISO any operating procedures created pursuant to this Agreement that reasonably may be expected to affect the ISO Controlled Grid and shall coordinate with the ISO and Riverside regarding any changes to such operating procedures. If the ISO directs a change to such operating procedures to comply with Applicable Reliability Criteria, the Parties shall implement and abide by the change directed by the ISO subject to their exercise of any rights of denial, review or appeal under the ISO Tariff or NERC/WECC Reliability Standards. Notwithstanding the above sentence, if a Party reasonably determines that such change will negatively impact safety or reliability of its electrical system, such change will not be implemented until the ISO's dispute resolution process has been exercised.

8.19. Either Party may undertake modifications to its facilities. If a Party plans to undertake a modification that reasonably may be expected to affect the other Party's facilities, including addition of ties to other utilities and generation additions, that Party, (or the ISO pursuant to ISO tariff requirements as appropriate), will provide to the other Party sufficient information regarding such modification so that the other Party may evaluate the potential impact of such modification prior to commencement of the work. Such information shall be deemed to be Confidential Information (as defined in Section 28) hereunder and shall include information concerning the timing of such modifications and whether such modifications are expected to interrupt the flow of electricity to or from the Party's respective substation. The Party desiring to perform such work shall provide the relevant drawings, plans, and specifications to the other Party at least ninety (90) calendar days in advance of the commencement of the work or such shorter period upon which the Parties may agree, which agreement shall not unreasonably be withheld, conditioned or delayed.

8.20. The costs associated with any mitigation measures required to third party transmission systems resulting from the interconnection of the Riverside Wilderness Substation to SCE's electrical system are not reflected in this Agreement. Nothing in this Agreement shall impose on SCE or Riverside any responsibility to pay costs associated with any measures to mitigate impacts to

third party electrical systems resulting from the interconnection of the Riverside Wilderness Substation to SCE's electrical system.

8.21. Except for its willful misconduct, its negligence, or with respect to its breach of this Agreement, or as otherwise specifically set forth herein, SCE, its directors, members of its governing board, officers, employees and/or agents shall not be liable to Riverside for any loss, damage, claim, cost, charge or expense arising from or related to this Agreement.

9. **Interconnected Operations**:

9.1. SCE shall, at its expense, operate and maintain the ISO Controlled Facilities in accordance with the applicable Transmission Control Agreement provisions, WECC and NERC reliability criteria, established SCE operating and maintenance procedures and Good Utility Practice as they may change from time to time.

9.2. SCE shall operate and maintain the SCE Interconnection Facilities in accordance with the applicable Transmission Control Agreement provisions, WECC and NERC reliability criteria, established SCE operating and maintenance procedures and Good Utility Practice as they may change from time to time, and Riverside shall pay SCE to perform such operation and maintenance of the SCE Interconnection Facilities, pursuant to Section 14.

9.3. Riverside shall, at its expense, operate and maintain the Riverside Wilderness Substation in accordance with the applicable ISO Tariff provisions and protocols, TO Tariff provisions, WECC and NERC reliability criteria, jointly established operating procedures, established Riverside operating procedures and Good Utility Practice as they may change from time to time.

9.4. Riverside shall comply with all Applicable Reliability Criteria for the Riverside Interconnection Facilities and Riverside Wilderness Substation. SCE shall have no responsibility for complying with mandatory reliability standards for such facilities.

9.5. SCE shall comply with all Applicable Reliability Criteria for the SCE Interconnection Facilities, Wildlife Substation and the Mira Loma-Vista 220 kV Line Loop.

9.6. Riverside shall maintain reactive flow at grid interface points within a specified power factor band of 0.97 lag to 0.99 lead, or as otherwise established by the ISO. Riverside shall not be compensated for the service of maintaining the power factor at required levels within the bandwidth.

9.7. The Riverside Wilderness Substation shall be operated so as to prevent or protect against the following adverse conditions on SCE's electric system: inadvertent and unwanted re-energizing of the SCE Interconnection Facilities; interconnection while out of synchronization; overcurrent; voltage imbalance; ground faults; generated alternating current frequency outside permitted safe limits; poor power factor or reactive power outside permitted limits; and abnormal waveforms.

9.8. The SCE Interconnection Facilities shall be operated so as to prevent the following adverse conditions on Riverside's electric system: inadvertent and unwanted re-energizing of the Riverside Interconnection Facilities,

interconnection while out of synchronization; overcurrent; voltage imbalance; ground faults; generated alternating current frequency outside permitted safe limits; poor power factor or reactive power outside permitted limits; and abnormal waveforms.

9.9. The Riverside Interconnection Facilities shall normally be operated with all of the Riverside Interconnection Facilities protective relaying systems in service whenever such Riverside Interconnection Facilities are connected to, or are operated in parallel with, Wildlife Substation. If such Riverside Interconnection Facilities contain redundant protective relaying, such redundant protective relaying may be disconnected from operation as long as adequate relay protection remains in-service and serves an identical purpose. Any other deviation for brief periods of emergency or maintenance shall only be by agreement of the Authorized Representatives, each Party's designated switching center or operations center as identified in the operating procedure or as may be directed by the ISO.

9.10. The SCE Interconnection Facilities shall normally be operated with all of the SCE Interconnection Facilities protective relaying systems in service whenever such SCE Interconnection Facilities are connected to, or are operated in parallel with, the Riverside Wilderness Substation. If such SCE Interconnection Facilities contain redundant protective relaying, such redundant protective relaying may be disconnected from operation as long as adequate relay protection remains in-service and serves an identical purpose. Any other deviation for brief periods of emergency or maintenance shall only be by agreement of the Authorized Representatives, each Party's designated switching center or operations center as identified in the operating procedure or as may be directed by the ISO.

9.11. Each Party shall maintain operating communications with the other Party's designated switching or operations center. The operating communications shall include, but not be limited to, system parallel operation or separation, scheduled and unscheduled outages, equipment clearances, protective relay operations, and levels of operating voltage and reactive power.

9.12. Riverside shall not commence initial parallel operation of the Riverside Interconnection Facilities with the SCE Interconnection Facilities, and SCE shall not commence initial parallel operation of the SCE Interconnection Facilities with the Riverside Interconnection Facilities until written approval for the initial parallel operation of the Riverside Wilderness Substation with SCE's Wildlife Substation has been given by SCE and Riverside, which approval shall not be unreasonably withheld.

9.13. Following outages of the SCE Interconnection Facilities or the Riverside Interconnection Facilities, neither Party shall energize their respective Interconnection Facilities for any reason without specific concurrence from the other Party's operations center. Such permission shall not be unreasonably withheld.

9.14. Riverside shall provide to SCE by September 1, of each year, such information concerning Riverside's electric system as is required for SCE to comply with the bulk power system modeling requirements of the WECC. Riverside shall

comply with the rules, regulations, procedures and guidelines of the WECC working group known as the Modeling and Validation Working Group, and its assignees or successors, to assure full compliance with all system modeling requirements of the WECC. If Riverside's distribution system is not part of the system modeling requirements of the WECC, then by September 1, of each year, Riverside shall provide SCE with updated system modeling of Riverside's distribution system.

9.15. After the Riverside Wilderness Substation In-Service Date, Riverside shall not cause the Riverside Wilderness Substation or Riverside's distribution system connected to Riverside's Wilderness Substation to operate in parallel with or to interconnect to:

(i) Riverside's distribution system served under other TO Tariff or Wholesale Distribution Access Tariff interconnection facilities agreements or service agreements,

(ii) other SCE facilities, or

(iii) any facilities served by other electric utilities without prior review and consent from SCE, or unless such parallel operation is established pursuant to the operating procedures established pursuant to Section 8.17. Consent shall not be unreasonably withheld or delayed. Interconnection and operation of additional generating facilities within Riverside's service territory shall be subject to Section 9.16.

9.16. After the Riverside Wilderness Substation In-Service Date, the parties agree to abide by the processes, protocols, and agreements promulgated by FERC in Order No. 2003[1] and Order No. 2006.[2] Additionally, Riverside shall provide to SCE by September 1 of each year a forecast of planned generation capacity additions to Riverside's electric system for each of the following three (3) calendar years. SCE shall provide to Riverside by September 1 of each year a forecast of planned generation capacity additions to SCE's Eastern Division for each of the following three (3) calendar years.

9.17. Each Party shall provide the other with at least fourteen (14) calendar days written notice prior to the initial and subsequent testing of their respective Interconnection Facilities protective relaying systems. Such protective relaying systems shall be tested at intervals not to exceed four (4) years. Each Party shall have the right to have a representative present at the initial and subsequent testing of the other Party's Interconnection Facilities protective relaying systems

---

[1] *Standardization of Generator Interconnection Agreements and Procedures*, Order No. 2003, FERC Stats. & Regs. 31,146 (2003), *order on reh'g*, Order No. 2003-A, FERC Stats. & Regs. ¶31,160, *order on reh'g*, Order No. 2003-B, FERC Stats. & Regs. ¶31,171 (2004), *order on reh'g*, Order No. 2003-C, FERC Stats. & Regs. ¶31,190 (2005), *aff'd sub nom. Nat'l Ass'n of Regulatory Util. Comm'rs v. FERC*, 475 F.3d 1277 (D.C. Cir 2007) (collectively, Order No. 2003).

[2] *Standardization of Small Generator Interconnection Agreements and Procedures*, Order No. 2006, FERC Stats. & Regs. ¶31,180, *order on reh'g*, Order No. 2006-A, FERC Stats. & Regs. ¶31,196 (2005), *order granting clarification*, Order No. 2006-B, FERC Stats. & Regs. ¶31,221 (2006) (collectively, Order No. 2006).

and to receive copies of the test results.

9.18. Each Party may require the other Party to demonstrate to such Party's satisfaction the correct calibration and operation of the respective Party's Interconnection Facilities protective relaying systems at any time a Party has reason to believe that such protective relaying systems may impair the Party's electric system integrity.

9.19. The Parties shall cooperate with one another in scheduling maintenance to the SCE Interconnection Facilities, the Riverside Interconnection Facilities, and the Mira Loma-Vista 220 kV Line Loop, or in taking any component of such facilities out of service, provided that in an Emergency Condition either Party may take any component(s), excluding relay protection, of such facilities out of service without notice to the other Party. The Parties shall use commercially reasonable efforts to avoid performing regularly scheduled maintenance during system peak conditions, or during instances when scheduled maintenance to or forced outages of other system equipment may adversely impact SCE or Riverside's system reliability.

9.20. Each Party shall provide advance notice to the other Party, by January 1, May 1, and September 1 of each year, of the estimated scheduled maintenance for its respective Interconnection Facilities, and the Mira Loma-Vista 220 kV Line Loop for the succeeding four months.

9.21. Riverside shall provide to SCE by September 1 of each year an update of Riverside's load forecast for the Interconnection for the following five (5) calendar years.

9.22. This Agreement governs the Interconnection of the Riverside Wilderness Substation to SCE's electrical system pursuant to the TO Tariff and as described herein. Riverside shall be responsible for making all necessary operational arrangements with the ISO, including, without limitation, arrangements for obtaining transmission service to or from the ISO Controlled Grid, and for scheduling delivery of energy and other services to or from the ISO Controlled Grid for delivery to or from the Riverside Wilderness Substation.

9.23. Consistent with Good Utility Practice, WECC and NERC Reliability Standards, and the operating procedure, either Party may take actions or inactions with regard to its Interconnection Facilities or any portion of its electric system during an Emergency Condition in order to (i) preserve public health and safety, (ii) preserve the reliability of such Party's electric system, (iii) limit or prevent damage, and (iv) expedite restoration of service. The Party taking such actions or inactions to address an Emergency Condition shall use reasonable efforts to minimize the effect of such actions or inactions on the Interconnection Facilities and/or electric system of the other Party, and the Parties shall use reasonable efforts to assist each other in addressing Emergency Conditions. When possible, the Party taking actions or inactions to address an Emergency Condition shall provide advance notice to the other Party if such actions or inactions reasonably may be expected to affect such other Party's electric system. When it is not possible to provide advance notice, the Party taking actions or inactions to address an Emergency Condition shall notify the other Party as soon as practicable.

10. **Metering**:

10.1. The ISO meters shall be located on Riverside's side of the Point Of Interconnection.
10.2. Riverside shall be responsible for the installation, maintenance and certification of ISO quality metering for the Riverside Wilderness Substation in accordance with applicable ISO Tariff provisions and metering requirements.
10.3. Riverside shall own all ISO metering infrastructure associated with the Riverside Wilderness Substation and be responsible for all costs of such infrastructure including, without limitation, testing and certification of ISO metering.
10.4. Riverside shall be responsible for obtaining ISO approval for the installation of ISO metering at the Riverside Wilderness Substation prior to operation.
10.5. Riverside shall be responsible for any loss correction factor applicable to Riverside's metering in accordance with applicable ISO Tariff provisions and metering requirements.
10.6. SCE may, at its discretion, electronically access Riverside's ISO metering to monitor real and reactive power flows related to the Interconnection. Riverside shall include, through its Metered Subsystem Agreement with the ISO or other form of agreement acceptable to the ISO and Riverside, express written authorization for SCE to access information available from Riverside's ISO metering for purposes of such monitoring.
10.7. Notwithstanding Section 10.6, Riverside shall make available to SCE, real time dynamic status, output MW, MVAR of any new generating units to SCE's Grid Control Center for which the ISO requires real-time telemetry data. Riverside shall make available Riverside Interconnection Facilities circuit breaker status, output MW, MVAR, alarms and indication to SCE and SCE will make available 220 kV status of SCE's Interconnection Facilities to Riverside.

11. **Capital Additions**:

11.1. SCE shall engineer, design, procure, construct, install, own, operate and maintain all Capital Additions pursuant to Good Utility Practice.
11.2. Except as otherwise provided in Section 11.3, whenever Capital Additions are required pursuant to Good Utility Practice (which may include compliance with system or regulatory requirements), Riverside shall pay all charges associated with such Capital Additions in accordance with Section 15.
11.3. In the event that Capital Additions are required in order to benefit SCE, because of damage caused by negligence or willful misconduct of SCE, to interconnect a third party to SCE's electrical system, or to provide transmission service to a third party under any SCE Tariff, Riverside shall not bear cost responsibility for such Capital Additions. No adjustment will be made to the SCE Interconnection Facilities Cost or Interconnection Facilities Charge, and no Capital Additions Cost or One-Time Cost will be charged to Riverside for such Capital Additions.

12. **Removal Of SCE Interconnection Facilities**:

12.1. Following termination of this Agreement, SCE will remove the SCE

Interconnection Facilities from service to Riverside.

12.2. On or before the date one year following termination of this Agreement, SCE shall notify Riverside whether SCE intends to physically remove the SCE Interconnection Facilities or any part thereof. If SCE intends to physically remove the SCE Interconnection Facilities or any part thereof, then SCE shall physically remove such facilities within two (2) years from the date of notification of intent, and Riverside shall pay the Removal Cost in accordance with Sections 14.1 and 15.2. If SCE does not intend to physically remove the SCE Interconnection Facilities or any part thereof, then Riverside shall have no obligation to pay such Removal Cost.

13. **Sale of Land**:

13.1. SCE purchased the land associated with Wildlife Substation that is currently owned by Riverside and Riverside sold to SCE the land required for Wildlife Substation that it owned as determined during design to be necessary in connection with initial operation of Wildlife Substation to provide for appropriate space and access rights for future getaway requirements, installation, operation, maintenance, replacement and removal of SCE required facilities, including, but not limited to, facilities required for station light and power and other required SCE facilities, in connection with the initial design of Wildlife Substation as shown in Exhibit D, at a price equal to the fair market value of the land as determined by a licensed appraiser.

13.2. Such property sale occurred prior to SCE's commencement of construction of Wildlife Substation. .

14. **Charges**:

14.1. Riverside shall pay to SCE the following charges in accordance with this Agreement: (a) the cost of the ISO Controlled Facilities pursuant to Section 14.4, (b) SCE Interconnection Facilities Payment; (c) SCE Interconnection Facilities Charge; (d) Capital Additions Payment; (e) any reimbursable FERC fees pursuant to Section 19.2; (f) Removal Cost; (g) termination charges pursuant to Section 5.5.

14.2. All costs incurred hereunder shall be accounted for in accordance with Accounting Practice, including but not limited to, the cost of the ISO Controlled Facilities, SCE Interconnection Facilities Cost, Capital Additions Cost, One-Time Cost and Removal Cost.

14.3. Nothing in this Agreement shall impose on SCE any responsibility to pay any costs associated with the design, permitting and construction of the Riverside Wilderness Substation.

14.4. Subject to reimbursement pursuant to Section 14.5, Riverside was responsible for the payment of all costs incurred by SCE for engineering and design activities, right-of-way studies, environmental support, permitting, and other support activities reasonably determined to be necessary for the construction of Wildlife Substation and the Mira Loma-Vista 220 kV Line Loop, prior to the ISO's Board approval of the ISO Controlled Facilities and the CPUC's approval

of SCE's CPCN application to be filed in relation to this project.

14.4.1. Riverside paid to SCE the estimated costs of performing such work in accordance with the payment schedule provided in Exhibit C. Riverside's payments to SCE under the terms of the Letter Agreement were credited to the cost incurred by SCE under the terms of this Agreement.

14.4.2. Upon ISO Board Approval of the ISO Controlled Facilities and the CPUC's approval of SCE's CPCN application, Riverside's obligation to make payments for the ISO Controlled Facilities pursuant to Exhibit C ceased.

14.5. Following both ISO Board approval of the ISO Controlled Facilities and CPUC approval of SCE's CPCN application, SCE reimbursed Riverside for all payments made to SCE by Riverside for the ISO Controlled Facilities pursuant to Section 14.4, without interest, subject to Section 14.7 hereof.

14.6. Following both ISO Board approval of the ISO Controlled Facilities and CPUC approval of SCE's CPCN application, SCE reimbursed Riverside for the actual costs Riverside reasonably incurred in complying with CEQA requirements and for engineering and design activities, right-of-way studies, environmental support, permitting, and other support activities reasonably determined to be necessary for the construction of Wildlife Substation and the Mira Loma-Vista 220 kV Line Loop, without interest, subject to Section 14.7 hereof.

14.7. Riverside shall reimburse SCE for all costs incurred by SCE, including any costs reimbursed to Riverside pursuant to Sections 14.5 and 14.6, for the design, engineering, permitting and regulatory, construction and installation of Wildlife Substation and the Mira Loma-Vista 220 kV Line Loop in the event that (i) this Agreement is terminated prior to the date the Riverside Wilderness Substation is physically interconnected to Wildlife Substation and energized; (ii) Riverside terminates its plan to complete construction and installation of the Riverside Wilderness Substation; (iii) Riverside does not complete construction and installation of the Riverside Wilderness Substation within one (1) year following the Wildlife Substation In-Service Date, unless such delay is due to an Uncontrollable Force event or the delay is agreed to by SCE in writing; or (iv) Riverside alters its interconnection request or changes the project and facilities description as originally specified in Riverside's 220 kV interconnection request dated December 20, 2004, such that Wildlife Substation and the Mira Loma-Vista 220 kV Line Loop are no longer required. If such events in this Section 14.7(ii), (iii), or (iv) above occur, SCE shall have the right to terminate this Agreement subject to FERC acceptance and approval.

14.8. Riverside agrees to indemnify SCE for any ITCC related to Riverside's payments or transfer of property to SCE under this Agreement for SCE Interconnection Facilities Cost and the Capital Additions Cost.

14.8.1. For SCE Interconnection Facilities Cost and the Capital Additions Cost, Riverside's liability for ITCC under this Agreement shall be calculated on a fully grossed-up basis. Except as may otherwise be agreed to by the Parties, Riverside shall pay SCE an amount equal to (1) the current taxes imposed on SCE ("Current Taxes") on the excess of (a) the gross

income realized by SCE as a result of payments or property transfers made by Riverside to SCE under this Agreement (the "Gross Income Amount") over (b) the present value of future tax deductions for depreciation that will be available as a result of such payments or property transfers (the "Present Value Depreciation Amount"), plus (2) an additional amount sufficient to permit SCE to receive and retain, after the payment of all Current Taxes, an amount equal to the net amount.

14.8.2. For this purpose, (i) Current Taxes shall be computed based on SCE's composite federal and state tax rates at the time the payments or property transfers are received and SCE will be treated as being subject to tax at the highest marginal rates in effect at that time (the "Current Tax Rate"), and (ii) the Present Value Depreciation Amount shall be computed by discounting SCE 's anticipated tax depreciation deductions as a result of such payments or property transfers by SCE 's current weighted average cost of capital. Thus, the formula for calculating Riverside's liability to SCE pursuant to this Agreement can be expressed as follows: (Current Tax Rate x (Gross Income Amount – Present Value of Tax Depreciation))/(1-Current Tax Rate).

14.8.3. At Riverside's request and expense, SCE shall file with the Internal Revenue Service ("IRS") a request for a Private Letter Ruling ("PLR") as to whether any property transferred or sums paid, or to be paid, by Riverside to SCE under this Agreement are subject to federal income taxation. Riverside will prepare the initial draft of the request for a PLR and will certify under penalties of perjury that all facts represented in such request are true and accurate to the best of Riverside's knowledge. Riverside and SCE shall cooperate in good faith with respect to the submission of such request. SCE shall keep Riverside fully informed of the status of such request for a PLR and shall execute either a privacy act waiver or a limited power of attorney, in a form acceptable to the IRS, that authorizes Riverside to participate in all discussions with the IRS regarding such request for a PLR. SCE shall allow Riverside to attend all meetings with IRS officials about the request and shall permit Riverside to prepare the initial drafts of any follow-up letters in connection with the request.

14.8.4. Notwithstanding any other provision of this Agreement, Riverside shall be relieved of the obligation to pay any ITCC, or maintain Credit Support pursuant to Section 14.9, to the extent that a favorable PLR is obtained. In the event that (a) a PLR is issued to SCE which holds that any amount paid or the value of any property transferred by Riverside to SCE under the terms of this Agreement is not subject to federal income taxation, (b) any legislative change or administrative announcement, notice, ruling or other determination makes it reasonably clear to SCE in good faith that any amount paid or the value of any property transferred by Riverside to SCE under the terms of this Agreement is not taxable to SCE, (c) any abatement, appeal, protest, or other contest results in a determination that any payments or transfers made by Riverside to SCE

are not subject to federal income tax, or (d) if SCE receives a refund from any taxing authority for any overpayment of tax attributable to any payment or property transfer made by Riverside to SCE pursuant to this Agreement, SCE shall promptly refund to Riverside the following:

14.8.4.1. any payment made by Riverside under this Section 14 for taxes that is attributable to the amount determined to be non-taxable, together with interest thereon,

14.8.4.2. interest on any amounts paid by Riverside to SCE for such taxes which SCE did not submit to the taxing authority, calculated in accordance with the methodology set forth in FERC's regulations at 18 CFR §35.19a(a)(2)(iii) from the date payment was made by Riverside to the date SCE refunds such payment to Riverside, and,

14.8.4.3. with respect to any such taxes paid by SCE, any refund or credit SCE receives or to which it may be entitled from any Governmental Authority, interest (or that portion thereof attributable to the payment described in Section 14.8.4.1, above) owed to SCE for such overpayment of taxes (including any reduction in interest otherwise payable by SCE to any Governmental Authority resulting from an offset or credit); provided, however, that SCE will remit such amount promptly to Riverside only after and to the extent that SCE has received a tax refund, credit or offset from any Governmental Authority for any applicable overpayment of income tax related to SCE's Interconnection Facilities.

The intent of this provision is to leave the Parties, to the extent practicable, in the event that no taxes are due with respect to any payment for Interconnection Facilities hereunder, in the same position they would have been in had no such tax payments been made.

14.9. Except as provided in Section 14.8.4, Riverside shall pay to SCE, pursuant to the payment schedule in Appendix C, the ITCC, or (ii), to the extent Riverside requests to pursue a PLR consistent with Section 14.8.3, provide to SCE, as security for the estimated ITCC for the SCE Interconnection Facilities or Capital Additions, in a form that is acceptable to SCE in its sole discretion, (a) an unconditional and irrevocable letter of credit in US dollars from a depository institution organized under the laws of the United States of America or any State (or any domestic branch of a foreign bank), which (i) has either (A) a long-term unsecured debt rating of A or higher by S&P or A2 or higher by Moody's or (B) a certificate of deposit rating of A-1+ by S&P and P-1 by Moody's, and (ii) whose deposits are insured by FDIC, together with evidence of such ratings; (b) an unconditional and irrevocable surety bond in US dollars issued by an insurance company that has and maintains an Insurance Financial Strength rating of A2 or higher from Moody's or A or higher from S&P, and is rated no less than A- (with a minimum size rating of VIII) by Best's Insurance Guide and Key Ratings, together with evidence of such ratings; (c) an amount of money equal to the ITCC obligations deposited into an escrow account as agreed upon between

the Parties or (d) other security that is acceptable to SCE in its sole discretion.

14.9.1. Any Credit Support provided hereunder for any ITCC associated with the initial SCE Interconnection Facilities shall be payable in at least the amount specified in Section 14.9.2, and shall be issued in favor of or for the benefit of SCE and its successors and assignees, and shall state that it may be drawn upon in whole or in part by SCE or its successors or assignees at any time (i) if a substitute Credit Support meeting the requirements of Section 14.9 is not provided within ten (10) calendar days after any reduction in the applicable rating of the credit provider meeting the requirements of Section 14.9 below the level specified herein; or (ii) if a substitute Credit Support has not been provided at least thirty (30) calendar days before any expiration of the Credit Support.

14.9.2. The amount available to be drawn under any Credit Support for ITCC on the initial SCE Interconnection Facilities shall be equal to $2,543,498.88. Any Credit Support provided for Capital Additions shall be based on a good faith estimate of the ITCC, if any, for such Capital Additions for which Riverside will be responsible.

14.9.3. In addition to the provisions described above, any Credit Support provided hereunder shall contain such terms, conditions, waivers, representations, covenants, and other provisions as may be customary for similar instruments delivered in the State of California, as approved by SCE in its reasonable discretion.

15. **Billing And Payment**:

15.1. **Billing Procedure**.

15.1.1. Except as otherwise specifically provided herein, commencing on or following the Effective Date, SCE will render bills to Riverside for charges and payments under this Agreement and Riverside shall pay such bills within twenty (20) calendar days of receipt of such bills. All payments shall be made in immediately available funds payable to SCE, or by wire transfer to a bank named by SCE.

15.1.2. Riverside shall make payments to SCE for the work as described in Section 14.4 and the SCE Interconnection Facilities Payment according to the payment schedule shown in Exhibit C. The amount of such charges is based on SCE's cost estimates and shall be subject to later adjustment pursuant to Sections 15.1.8.1 and 15.1.8.2.

15.1.3. Commencing on or following the Wildlife Substation In-Service Date, each month SCE will render bills to Riverside for the SCE Interconnection Facilities Charge. The SCE Interconnection Facilities Charge payments shall initially be based on SCE's estimate of the SCE Interconnection Facilities Cost, and such payments shall be subject to later adjustment pursuant to Sections 15.1.8.3 and 15.1.8.4. The SCE Interconnection Facilities Charge for the first and last month of service hereunder shall be pro-rated based on the number of days in which

service was provided during said months.

15.1.4. SCE will bill Riverside for the Capital Additions Payment prior to commencing any work on any Capital Additions; provided that, at SCE's sole discretion, SCE may bill Riverside for the Capital Additions Payment after commencing such work if SCE determines that Capital Additions are required in accordance with safety or regulatory requirements or to preserve system integrity or reliability. Such billing shall initially be based on SCE's cost estimates and shall be subject to later adjustment pursuant to Sections 15.1.8.1 and 15.1.8.2. Riverside may be required to provide additional security for such Capital Additions pursuant to Section 14.9.

15.1.5. Except as otherwise provided in Section 11.3, if any components comprising a part of the SCE Interconnection Facilities are removed to accommodate such Capital Additions and such removal results in a change in the SCE Interconnection Facilities Cost, the SCE Interconnection Facilities Charge shall be adjusted as of the in-service date of such Capital Additions to reflect the change in the SCE Interconnection Facilities Cost.

15.1.6. Except as otherwise provided in Section 11.3, if such Capital Additions result in any change in the SCE Interconnection Facilities Cost, then the SCE Interconnection Facilities Charge shall be adjusted as of the in-service date of such Capital Additions to reflect the change in the SCE Interconnection Facilities Cost.

15.1.7. Commencing on the Effective Date, SCE will render bills to Riverside for any reimbursable FERC fees in accordance with Section 19.2. Such billing shall be for any reimbursable FERC fees or costs incurred since the preceding billing.

15.1.8. Within twelve (12) months following the Wildlife Substation In-Service Date, or the in-service date of any Capital Additions, as the case may be, SCE shall determine the actual recorded SCE Interconnection Facilities Cost, or the Capital Additions Cost, including the associated ITCC (if applicable) and One-Time Cost, and provide Riverside with a final invoice.

15.1.8.1. If the amounts paid for the estimated SCE Interconnection Facilities Payment, or the Capital Additions Payment are less than the amounts due for the SCE Interconnection Facilities Payment, or the Capital Additions Payment as determined from the actual recorded SCE Interconnection Facilities Cost, or the Capital Additions Cost, including the associated One-Time Cost, SCE will bill Riverside for the difference between the amounts previously paid by Riverside and the actual recorded costs, without interest, within twenty (20) calendar days of the date of such invoice.

15.1.8.2. If the amounts paid for the estimated SCE Interconnection Facilities Payment, or the Capital Additions Payment are

greater than the amounts due for the SCE Interconnection Facilities Payment, or the Capital Additions Payment as determined from the actual recorded SCE Interconnection Facilities Cost, or the Capital Additions Cost, including the associated One-Time Cost, SCE will refund Riverside the difference between the amounts previously paid by Riverside and the actual recorded costs, without interest, within twenty (20) calendar days of the date of such invoice.

15.1.8.3. If the amounts paid for the SCE Interconnection Facilities Charge are less than the amounts due for the SCE Interconnection Facilities Charge as determined from the actual recorded SCE Interconnection Facilities Cost, SCE will bill Riverside for the difference between the amounts previously paid by Riverside and the amounts which would have been paid based on actual recorded costs, without interest, on the next regular billing.

15.1.8.4. If the amounts paid for the SCE Interconnection Facilities Charge are greater than the amounts due for the SCE Interconnection Facilities Charge as determined from the actual recorded SCE Interconnection Facilities Cost, SCE will credit Riverside the difference between the amounts previously paid by Riverside and the amounts which would have been paid based on actual recorded costs, without interest, on the next regular billing.

15.1.9. Within sixty (60) days following the later of (1) ISO Board approval of the ISO Controlled Facilities or (2) CPUC approval of SCE's CPCN application, pursuant to Section 14.5, Riverside shall invoice SCE for the amount that Riverside paid to SCE pursuant to Section 14.4 for the ISO Controlled Facilities, and SCE shall pay such amount invoiced, without interest, within twenty (20) calendar days following receipt of such invoice

15.1.10. Within sixty (60) calendar days following the later of (1) ISO Board approval of the ISO Controlled Facilities or (2) CPUC approval of SCE's CPCN application, pursuant to Section 14.6, Riverside shall submit to SCE an invoice itemizing Riverside's actual costs incurred in complying with CEQA requirements and for engineering and design activities, right-of-way studies, environmental support, permitting, and other support activities reasonably determined to be necessary for the construction of Wildlife Substation and the Mira Loma-Vista 220 kV Line Loop, and SCE shall pay such amount invoiced, without interest, within twenty (20) calendar days following receipt of such invoice.

15.1.11. Upon termination of this Agreement in accordance with Section 14.7, Riverside shall pay to SCE an amount equal to the amount previously reimbursed to Riverside by SCE pursuant to Sections 14.5 and 14.6, without interest within twenty (20) calendar days of receipt of an

itemized invoice from SCE for such previously reimbursed amounts.

15.1.12. If this Agreement terminates prior to the Wildlife Substation In-Service Date, then within twelve (12) months following such termination, SCE will submit to Riverside an invoice itemizing SCE's actual costs incurred (or, as of the termination date, committed to be incurred, and subsequently paid) pursuant to this Agreement. Such invoice shall reflect all payments received by SCE from Riverside, which shall be credited against the amount of SCE's costs and expenses incurred or irrevocably committed to be incurred in accordance with this Agreement.

15.1.12.1. If the amounts paid by Riverside to SCE prior to the termination of this Agreement are less than the amounts due under this Agreement, as determined from the actual recorded cost, SCE will bill Riverside for the difference between the amounts previously paid by Riverside and the actual costs, without interest, within twenty (20) calendar days of the date of such invoice.

15.1.12.2. If the amounts paid by Riverside to SCE prior to the termination of the Agreement are greater than the amounts due under this Agreement, as determined from the actual recorded cost, SCE will refund Riverside the difference between the amounts previously paid by Riverside and the actual costs, without interest, within twenty (20) calendar days of the date of such invoice.

15.2. **Removal Costs**.

15.2.1. If, in accordance with Section 12.2, SCE decides to physically remove the SCE Interconnection Facilities, SCE shall render a bill to Riverside for the Removal Cost. Riverside shall pay the Removal Cost in accordance with Section 14.1. Such billing shall be initially based on SCE's estimate of the Removal Cost. Within 12 months following the removal of the SCE Interconnection Facilities SCE shall determine the recorded Removal Cost and provide Riverside with a final invoice.

15.2.2. If the amount paid for the Removal Cost is less than the amount due for the Removal Cost as determined from the actual recorded Removal Cost, SCE will bill Riverside for the difference between the amount previously paid by Riverside and the amount which would have been paid based on actual recorded costs, without interest, within twenty (20) calendar days after receipt thereof.

15.2.3. If the amount paid for the Removal Cost is greater than the amount due for the Removal Cost as determined from the actual recorded Removal Cost, SCE will refund Riverside the difference between the amount previously paid by Riverside and the amount which would have been paid based on actual recorded costs, without interest. SCE shall make such payment within twenty (20) calendar days after such

determination is made.

15.3. **Interest On Delinquent Balances**.

Interest on any delinquent amounts shall be calculated in accordance with the methodology specified for interest on refunds in FERC's regulations at 18 C.F.R. Section 35.19a(a)(2)(iii). Interest on delinquent amounts shall be calculated from the due date of the bill to the date of payment. When payments are made by mail, bills shall be considered as having been paid on the date of receipt by the owed Party.

15.4. **Default**.

In the event that Riverside fails for any reason to make payment to SCE on or before the due date as provided above, and such failure of payment is not corrected within thirty (30) calendar days after SCE notifies Riverside to cure such failure, a default by Riverside shall be deemed to exist. Upon the occurrence of a default, SCE shall have the right to terminate this Agreement subject to FERC acceptance or approval.

15.5. **Billing Dispute**.

In the event a Party desires to dispute all or any part of any bill submitted by the other Party, such disputing Party shall nevertheless pay the full amount of the bill when due and give written notification to the other Party's Authorized Representative within twenty-four (24) months from the date of the billing stating the grounds for the dispute and the amount in dispute. The disputing Party shall not be entitled to an adjustment on any bill not brought to the attention of the other Party within the time and in the manner herein specified. For any payments to a Party resulting from dispute resolutions, interest calculated in accordance with the methodology specified for interest on refunds in FERC's regulations at 18 C.F.R. Section 35.19a(a)(2)(iii) shall be added to the amount of any overpayment, and the entire amount refunded to the disputing Party.

15.6. **Addresses For Billing And Payment**.

15.6.1. All payments to be made by Riverside to SCE shall be sent to:

Southern California Edison Company
Accounts Receivable (GCM)
P.O. Box 800
2244 Walnut Grove Avenue
Rosemead, California 91771-0001

SCE may, at any time, by written notice to Riverside pursuant to Section 26, change the address to which payments will be sent.

15.6.2. All payments by SCE to Riverside shall be sent to:

City of Riverside
Central Cashiering
3900 Main Street
Riverside, CA 92522

15.6.3. All billings to be presented by SCE to Riverside shall be sent to:

City of Riverside
Public Utilities General Manager
3901 Orange Street
Riverside, CA 92501

Riverside may, at any time, by written notice to SCE pursuant to Section 26, change the addresses to which payments or billings will be sent.

16. **Disputes**:

Except where otherwise provided by this Agreement, and except as otherwise limited by law, the ISO ADR Procedures set forth in Section 13 of the ISO Tariff shall apply to all disputes between Riverside and SCE which arise under this Agreement; provided, however, that the ISO ADR Procedures set forth in Section 13 of the ISO Tariff shall not be used to determine whether (i) rates and charges set forth in this Agreement are just and reasonable under the Federal Power Act, or (ii) termination of this Agreement by SCE is permissible.

17. **Audits**:

17.1. SCE will maintain records and accounts of all costs it incurred and seeks reimbursement for pursuant to Section 14, for a period of twenty-four months following the issuance of the final invoices in accordance with Section 15, in sufficient detail to allow verification of all costs incurred, including, but not limited to, labor and associated labor burden, material and supplies, outside services, and administrative and general expenses.

17.2. Riverside will maintain records and accounts of all costs it incurred and seeks reimbursement for pursuant to Section 14 for a period of twenty-four months following the issuance of the final invoices in accordance with Section 15, in sufficient detail to allow verification of all costs incurred, including, but not limited to, labor and associated labor burden, material and supplies, outside services, and administrative and general expenses.

17.3. Riverside and SCE shall each have the right, during normal business hours, and upon prior reasonable notice to the other Party, to audit at its own expense the

other Party's accounts and records pertaining to such Party's performance or such Party's satisfaction of obligations owed to the other Party under this Agreement. Any audit authorized by this Section shall be performed at the offices where such accounts and records are maintained and shall be limited to those portions of such accounts and records that relate to such Party's performance and satisfaction of obligations under this Agreement.

18. **Authorized Representatives**:

18.1. In order to provide for the exchange of information and the preparation and approval of any necessary operating procedures or revisions to operating procedures regarding the activities required under this Agreement, and to otherwise engage in such activities as may be required for the implementation of this Agreement as provided in Section 18.4, each Party shall have an Authorized Representative as provided below.

18.2. Following execution of this Agreement and prior to the Wildlife Substation In-Service Date, the Authorized Representatives shall be as follows:

Southern California Edison Company:
Mr. Kenneth S. Spear MPM
Senior Project Manager
3 Innovation Way, PIV3 Second Floor
Pomona, CA 91768
(909) 275-3873
(626) 407-1252 (cell)

City of Riverside
City Manager
3900 Main Street
Riverside, CA 92522
(951) 826-5553
(951) 826-5470 (Fax)

18.3. Upon and subsequent to the Wildlife Substation In-Service Date, the Authorized Representatives shall be as follows:

Southern California Edison Company:
Grid Contract Management
Southern California Edison Company

2244 Walnut Grove Avenue
Rosemead, California 91770
(626) 302-9640

GridContractManagement@sce.com

City of Riverside

City Manager
3900 Main Street
Riverside, CA 92522
(951) 826-5553
(951) 826-5470 (Fax)

18.4. The Authorized Representatives are authorized to act on behalf of the Party they represent in the implementation of this Agreement. Any action taken or determination made by the Authorized Representatives in the implementation of this Agreement will be in writing. The Authorized Representatives may delegate any of their responsibilities herein, provided, that the Authorized Representative provides written notice to the other Party of such delegation of responsibility, and provided that the Authorized Representative may not delegate the execution of any communication required to be in writing pursuant to this Section.

18.5. The Authorized Representatives shall have no authority or power to modify, add, waive or eliminate any terms or conditions of this Agreement.

18.6. Either Party may at any time change the designation of its Authorized Representative by written notice to the other Party pursuant to Section 26.

19. **Regulatory Authority**:

19.1. Nothing contained herein shall be construed as affecting in any way: (i) the right of SCE to unilaterally make application to the FERC for a change in rates, charges, classification, or service, or any rule, regulation, or contract relating thereto, under Section 205 of the Federal Power Act and pursuant to the Rules and Regulations promulgated by FERC thereunder; (ii) the right of Riverside to oppose such changes under Section 205 of the Federal Power Act; (iii) the right of Riverside to file a complaint requesting a change in rates, charges, classification, or service, or any rule, regulation , or contract relating thereto, or rate methodology or design relating to services provided hereunder, under Section 206 of the Federal Power Act and pursuant to the rules and regulations promulgated by the FERC thereunder; or (iv) the right of SCE to oppose such complaint by Riverside under Section 206 of the Federal Power Act. Any change shall become effective pursuant to Section 205 of the Federal Power Act.

19.2. Riverside shall reimburse SCE for all fees and charges imposed on SCE by the FERC attributable to the service provided under this Agreement, or any amendments thereto. As of the Effective Date, FERC has not imposed any fees and charges on SCE attributable to the service provided under this Agreement.

19.3. The Parties each recognize that regulatory, or legislative cost recovery mechanisms may result in a Party recovering all or part of their costs in connection herewith from others, and nothing contained herein shall require a Party to forego the application of any such cost recovery mechanism(s), or alter any Party's responsibility for costs approved for recovery under any such mechanism(s).

20. **No Dedication Of Facilities**:

Any undertaking by one Party to the other Party under this Agreement shall not constitute the dedication of the electrical system or any portion thereof of the undertaking Party to the public or to the other Party, and it is understood and agreed that any such undertaking by a Party will cease upon the termination of its obligations hereunder.

21. **No Third Party Rights**:

Unless otherwise specifically provided in this Agreement, the Parties do not intend to create rights in or grant remedies to any third party as a beneficiary of this Agreement or of any duty, covenant, obligation, or undertaking established hereunder.

22. **Assignments**:

22.1. Any assignment by a Party of its interest in this Agreement which is made without the written consent of the other Party shall not relieve such assigning Party from the primary liability for any of its duties and obligations under this Agreement, and in the event of any such assignment, the assigning Party shall continue to remain primarily liable for payment of any and all money due to the other Party as provided under this Agreement, and for the performance and observance of all other covenants, duties, and obligations to be performed and observed under this Agreement by the assigning Party to the same extent as though no assignment had been made.

22.2. Except as otherwise provided by written agreement of the non-assigning Party, whenever an assignment of a Party's interest in this Agreement is made with the written consent of the other Party, the assigning Party's assignee shall expressly assume in writing the duties and obligations hereunder of the assigning Party and, within thirty (30) calendar days after any such assignment and assumption of duties and obligations, the assigning Party shall furnish or cause to be furnished to the other Party a true and correct copy of such assignment and assumption of duties and obligations.

23. **Relationship Of Parties**:

The covenants, obligations, and liabilities of the Parties are intended to be several and not joint or collective, and nothing contained in this Agreement shall ever be construed to create an association, joint venture, trust, or partnership, or to impose a trust or partnership covenant, obligation, or liability on or with regard to either Party. Each Party will be individually responsible for its own covenants, obligations, and liabilities as provided in this Agreement. Neither Party shall be under the control of or will be deemed to control the other Party. Neither Party will be the agent of or have a right or power to bind the other Party without such other Party's express written consent.

24. **Waivers**:

Any waiver at any time by either Party of its rights with respect to a default under this

Agreement, or with respect to any other matter arising in connection with this Agreement, will not be deemed a waiver with respect to any other or subsequent default or other matter arising in connection therewith. Any delay, short of any statutory period of limitation, in asserting or enforcing any right, will not be deemed a waiver of such right.

25. **Governing Law**:

Except as otherwise provided by federal law, this Agreement shall be governed by and construed in accordance with, the laws of the state of California.

26. **Notices**:

Any notice, demand, or request provided in this Agreement, or served, given, or made in connection with it, will be in writing and deemed properly served, given, or made if delivered in person, transmitted by facsimile (followed by written confirmation) or sent by United States mail, postage prepaid, to the persons specified herein unless otherwise provided in this Agreement:

Southern California Edison Company
Manager, Grid Contract Management,

2244 Walnut Grove Avenue
Rosemead, California 91770
Tel: (626) 302-9640
GridContractManagement@sce.com

City of Riverside
Public Utilities General Manager
3900 Main Street
Riverside, CA 92522
Tel: (951) 826-5784
Fax: (951) 826-2450

Either Party may at any time, by notice to the other Party, change the designation or address of the person so specified as the one to receive notices pursuant to this Agreement.

27. **Severability**:

In the event that any term, provision, covenant, or condition of this Agreement or the application of any such term, covenant, or condition will be held invalid as to any person, entity, or circumstance by any court, arbitration, or regulatory authority having jurisdiction, the invalidity of such term, covenant or condition shall not affect the validity of any other term, provision, condition or covenant and such term, provision, covenant or condition shall remain in force and effect as applied to this Agreement to the maximum extent permitted by law. The Parties hereto further agree to negotiate in

good faith to establish new and valid terms, conditions and covenants to replace any found invalid so as to place each Party as nearly as possible in the position contemplated by this Agreement.

28. **Confidentiality**:

Confidential Information shall include, without limitation, all information that is identified as confidential by the disclosing Party relating to a Party's technology, research and development, business affairs, and pricing, and any information supplied by either Party to the other Party prior to the Effective Date of this Agreement.

Information is Confidential Information only if it is clearly designated or marked in writing as confidential on the face of the document, or, if the information is conveyed orally or by inspection, if the Party providing the information orally informs the Party receiving the information that the information is confidential.
If requested by either Party, the other Party shall provide in writing, the basis for asserting that the information referred to in this Section 28 warrants confidential treatment, and the requesting Party may disclose such writing to the appropriate Governmental Authority. Each Party shall be responsible for the costs associated with affording confidential treatment to its information.

28.1. Term. During the term of this Agreement, and for a period of three (3) years after the expiration or termination of this Agreement, except as otherwise provided in this Section 28, each Party shall hold in confidence and shall not disclose to any person Confidential Information.

28.2. Scope. Confidential Information shall not include information that the receiving Party can demonstrate: (1) is generally available to the public other than as a result of a disclosure by the receiving Party; (2) was in the lawful possession of the receiving Party on a nonconfidential basis before receiving it from the disclosing Party; (3) was supplied to the receiving Party without restriction by a third party, who, to the knowledge of the receiving Party after due inquiry, was under no obligation to the disclosing Party to keep such information confidential; (4) was independently developed by the receiving Party without reference to Confidential Information of the disclosing Party; (5) is, or becomes, publicly known, through no wrongful act or omission of the receiving Party or breach of this Agreement; or (6) is required, in accordance with Section 28.7 of this Agreement, Order of Disclosure, to be disclosed by any Governmental Authority or is otherwise required to be disclosed by law or subpoena, or is necessary in any legal proceeding establishing rights and obligations under this Agreement. Information designated as Confidential Information will no longer be deemed confidential if the Party that designated the information as confidential notifies the other Party that it no longer is confidential.

28.3. Release of Confidential Information. No Party shall release or disclose Confidential Information to any other person, except to its employees, consultants, affiliates (limited by the Standards of Conduct requirements set forth in Part 358 of FERC's Regulations, 18 C.F.R. 358), subcontractors, or to

parties who may be or are considering providing financing to or equity participation with the disclosing Party, or to potential purchasers or assignees of the disclosing Party, on a needtoknow basis in connection with this Agreement, unless such person has first been advised of the confidentiality provisions of this Section 28 and has agreed to comply with such provisions. Notwithstanding the foregoing, a Party providing Confidential Information to any person shall remain primarily responsible for any release of Confidential Information in contravention of this Section 28.

28.4. Rights. Each Party retains all rights, title, and interest in the Confidential Information that each Party discloses to the other Party. The disclosure by each Party to the other Party of Confidential Information shall not be deemed a waiver by a Party or any other person or entity of the right to protect the Confidential Information from public disclosure.

28.5. No Warranties. The mere fact that a Party has provided Confidential Information does not constitute a warranty or representation as to its accuracy or completeness. In addition, by supplying Confidential Information, no Party obligates itself to provide any particular information or Confidential Information to the other Party nor to enter into any further agreements or proceed with any other relationship or joint venture.

28.6. Standard of Care. Each Party shall use at least the same standard of care to protect Confidential Information it receives as it uses to protect its own Confidential Information from unauthorized disclosure, publication or dissemination. Each Party may use Confidential Information solely to fulfill its obligations to the other Party under this Agreement or its regulatory requirements.

28.7. Order of Disclosure. If a court or a Governmental Authority or entity with the right, power, and apparent authority to do so requests or requires any Party, by subpoena, oral deposition, interrogatories, requests for production of documents, administrative order, or otherwise, to disclose Confidential Information, that Party shall provide the other Party with prompt notice of such request(s) or requirement(s) so that the other Party may seek an appropriate protective order or waive compliance with the terms of this Agreement. Notwithstanding the absence of a protective order or waiver, the Party may disclose such Confidential Information which, in the opinion of its counsel, the Party is legally compelled to disclose. Each Party will use reasonable efforts to obtain reliable assurance that confidential treatment will be accorded any Confidential Information so furnished.

28.8. Termination of Agreement. Upon termination of this Agreement for any reason, each Party shall, within ten (10) calendar days of receipt of a written request from the other Party, use reasonable efforts to destroy, erase, or delete (with such destruction, erasure, or deletion certified in writing to the other Party) or return to the other Party, without retaining copies thereof, any and all written or electronic Confidential Information received from the other Party.

28.9. Remedies. The Parties agree that monetary damages would be inadequate to compensate a Party for the other Party's breach of its obligations under this Section 28. Each Party accordingly agrees that the other Party shall be

entitled to equitable relief, by way of injunction or otherwise, if the first Party breaches or threatens to breach its obligations under this Section 28, which equitable relief shall be granted without bond or proof of damages, and the receiving Party shall not plead in defense that there would be an adequate remedy at law. Such remedy shall not be deemed an exclusive remedy for the breach of this Section 28, but shall be in addition to all other remedies available at law or in equity. The Parties further acknowledge and agree that the covenants contained herein are necessary for the protection of legitimate business interests and are reasonable in scope. No Party, however, shall be liable for indirect, incidental, or consequential or punitive damages of any nature or kind resulting from or arising in connection with this Section 28.

28.10. Disclosure to FERC, its Staff, or a State. Notwithstanding anything in this Section 28 to the contrary, and pursuant to 18 C.F.R. section 1b.20, if FERC or its staff, during the course of an investigation or otherwise, requests information from one of the Parties that is otherwise required to be maintained in confidence pursuant to this Agreement, the Party shall provide the requested information to FERC or its staff within the time provided for in the request for information. In providing the information to FERC or its staff, the Party must, consistent with 18 C.F.R. section 388.112, request that the information be treated as confidential and non-public by FERC and its staff and that the information be withheld from public disclosure. Each Party is prohibited from notifying the other Party to this Agreement prior to the release of the Confidential Information to FERC or its staff. Each Party shall notify the other Party to the Agreement when it is notified by FERC or its staff that a request to release Confidential Information has been received by FERC, at which time either of the Parties may respond before such information would be made public, pursuant to 18 C.F.R. section 388.112. Requests from a state regulatory body conducting a confidential investigation shall be treated in a similar manner if consistent with the applicable state rules and regulations.

28.11. Subject to the exception in Section 28.10, Confidential Information shall not be disclosed by the other Party to any person not employed or retained by the other Party, except to the extent disclosure is (i) required by law; (ii) reasonably deemed by the disclosing Party to be required to be disclosed in connection with a dispute between or among the Parties, or the defense of litigation or dispute; (iii) otherwise permitted by consent of the other Party, such consent not to be unreasonably withheld; or (iv) necessary to fulfill its obligations under this Agreement or as a transmission service provider or a balancing authority area operator including disclosing the Confidential Information to a regional transmission organization or the ISO or to a regional or national reliability organization. The Party asserting confidentiality shall notify the other Party in writing of the information it claims is confidential. Prior to any disclosures of the other Party's Confidential Information under this subparagraph, or if any third party or Governmental Authority makes any request or demand for any of the information described in this subparagraph, the disclosing Party agrees to promptly notify the other Party and cooperate

with the other Party in seeking to protect the Confidential Information from public disclosure by confidentiality agreement, protective order or other reasonable measures.

29. **Entire Agreement**:

This Agreement constitutes the complete and final expression of the agreement between the Parties and is intended as a complete and exclusive statement of the terms of their agreement which supersede all prior and contemporaneous offers, promises, representations, negotiations, discussions, communications, and other agreements which may have been made in connection with the subject matter of this Agreement.

30. **Amendment:**

Except as provided in Section 19.1, this Agreement may be amended only by a written instrument duly executed by the Parties.

31. **Ambiguities**:

Ambiguities or uncertainties in the wording of this Agreement shall not be construed for or against any Party, but will be construed in the manner that most accurately reflects the Parties' intent as of the date they executed this Agreement.

32. **Signature Clause**:

The signatories hereto represent that they are authorized to enter into this Agreement on behalf of the Party for whom they sign. This Agreement is hereby executed as of the ____ day of _____, 2009.

SOUTHERN CALIFORNIA EDISON COMPANY

By: __ _____
Name: James A. Kelly
Title: Senior Vice President

THE CITY OF RIVERSIDE

By: _____
Name: Mike Futrell
Title: City Manager

ATTEST:

_____
Name: Donesia Gause
Title City Clerk

Approved as to form:

_____

Name: Rebecca McKee-Reimbold
Title Interim City Attorney

INTERCONNECTION FACILITIES AGREEMENT BETWEEN
THE CITY OF RIVERSIDE
AND
SOUTHERN CALIFORNIA EDISON COMPANY

Exhibit A
Facilities Description

1. **ISO Controlled Facilities**: SCE shall:

   a. Wildlife Substation:
      i. Engineer, construct and install a new 220 kV interconnection facility with three positions arranged in a breaker-and-a-half configuration to terminate four lines and provide two points of service to the new City of Riverside Wilderness Substation. (SCE Interconnection Facilities located within the Wildlife Substation are as identified below)
      ii. Loop the existing Mira Loma-Vista No. 1 220 kV Transmission Line into the new 220 kV interconnection facility.
      iii. Wildlife Substation will be located adjacent to the Riverside Wilderness Substation.

      iv. Install a new HMI/EPAC at Wildlife Substation to monitor and control as follows:
         1. MW and MVAR on the incoming SCE lines.
         2. MW and MVAR on the outgoing Riverside lines.
         3. Bus voltage.
         4. Circuit breaker status at Wildlife Substation.
         5. Circuit breaker status of the Riverside Interconnection Facilities.
         6. Circuit breaker control.
         7. Protection relay status.
         8. Alarms status.
      v. Install reactive compensation as required.

   b. Mira Loma Substation:
      Upgrade line protection on the existing Mira Loma-Vista No. 1 220 kV line position by removing the existing relays and installing one G.E. L90 and one SEL411L line differential relays and two G.E. C60 breaker management relays. This line will become the Mira Loma-Wildlife 220 kV Transmission Line.

   c. Vista Substation:
      Upgrade the line protection on the existing Mira Loma-Vista No. 1 220 kV line position by removing the existing relays and installing one G.E. L90 and one SEL411L line differential relay and two G.E. C60 breaker management relays. This line will become the Vista-Wildlife 220 kV Transmission Line.

   d. Transmission:

i. Mira Loma-Vista No. 1 220 kV Transmission Line:
Engineer and construct approximately ten (10) miles of new double circuit overhead and underground lines constructed to loop the Mira Loma and Vista legs of the lines into Wildlife Substation as follows:
1. This work requires the installation of approximately 380,000 ft. of 1590KCMIL ACSR conductor and 32,000 ft. optical ground wire.
2. The Mira Loma-Vista No 1 220 kV Transmission Line loop into the new Wildlife Substation will be composed of a pair approximately 4 miles of underground transmission lines and approximately 6 miles of double circuit overhead 220 kV transmission lines
3. This work also requires the installation of two pairs of single-circuit dead-end tubular steel pole risers to sectionalize the existing 220 kV transmission line and transition the overhead lines underground. A total of thirty-eight double-circuit tubular steel poles and 4 double-circuit lattice towers will comprise the balance of the overhead transmission line structures.

e. Telecommunications:
i. Install two new taps and risers on the existing Mira Loma-Vista No. 1 fiber wrap and tap one side to the new optical ground wire of the new double circuit line connecting to Wildlife Substation.
ii. Install 65,000 ft. of new overhead fiber optic cable on a separate route between Mira Loma and Wildlife Substations.
iii. Both installations described above are required to form a new Mira Loma-Vista-Wildlife-Mira Loma closed fiber optic loop.
iv. Install new telecommunication equipment to Wildlife Substation to support the new line protection equipment.

f. Corporate Real Estate:
Acquire right-of-way as needed for Wildlife Substation and the 10 miles of double circuit transmission line.

2. SCE Interconnection Facilities: (Non-ISO Controlled Facilities). SCE shall:

a. Install within Wildlife Substation the following:
i. One position consisting of two 220 kV circuit breakers, disconnects, relay protection facilities, metering facilities, poles, conductors and appurtenant facilities, to provide one point of service to the Riverside Wilderness Substation.
ii. One position consisting of one 220 kV circuit breaker, disconnects, relay protection facilities, metering facilities, poles, conductors and appurtenant facilities, to provide a second point of service to the Riverside Wilderness Substation.

INTERCONNECTION FACILITIES AGREEMENT BETWEEN
THE CITY OF RIVERSIDE
AND
SOUTHERN CALIFORNIA EDISON COMPANY

Exhibit B
Facilities Cost

Element	Cost of ISO Controlled Facilities	SCE Interconnection Facilities Cost	SCE Interconnection Facilities ITCC*	SCE Interconnection Facilities One-Time Cost	Total Cost
Wildlife Substation	$38,433,000.00	$10,185,000.00	$2,444,400.00	$0.0	$51,062,400.00
Mira Loma Substation	$374,000.00	$0.00	$0.00	$0.00	$374,000.00
Vista Substation	$369,000.00	$0.00	$0.00	$0.00	$369,000.00
Transmission Line	$594,684,000.00	$0.00	$0.00	$0.00	$594,684,000.00
Telecommunications	$4,582,000.00	$0.00	$0.00	$0.00	$4,582,000.00
Metering Services	$25,000.00	$0.00	$0.00	$0.00	$25,000.00
Power System Control	$159,000.00	$0.00	$0.00	$0.00	$159,000.00
Corporate Real Estate	$70,543,000.00	$0.00	$0.00	$0.00	$70,543,000.00
Licensing & Permitting**	$18,211,000.00	$293,000.00	$70,320.00	$0.00	$18,574,320.00
Environmental	$22,860,000.00	$369,000.00	$88,560.00	$0.00	$23,317,560.00
Distirbution Line Relocation				$773,000.00	$773,000.00
Total	$750,240,000.00	$10,847,000.00	$2,603,280.00	$773,000.00	$764,463,280.00

All costs are in Nominal Dollars

SCE Interconnection Facilities Payment = (SCE Interconnection Facilities Cost + SCE Interconnection Facilities One-Time Cost + SCE Interconnection Facilities ITCC) = ($10,847,000 + $2,603,280+ $773,000.00) = $14,223,280

*SCE Interconnection Facilities ITCC will be provided for pursuant to Section 14.9
** Includes SCE and RPU's estimated Licensing and Permitting Costs.

Monthly Charges:

Estimated SCE Interconnection Facilities Charge = (Customer-Financed Monthly Rate x SCE Interconnection Facilities Cost):

Effective Date	Customer-Financed Monthly Rate	Estimated SCE Interconnection Facilities Cost	SCE Interconnection Facilities Charge Based on Estimated Cost**
SCE Interconnection	See Section 4.1 of	$10,847,000.00	Customer-Financed Monthly

Facilities In-Service Date	Appendix X to the Transmission Owner Tariff*		Rate for Non-ISO-Controlled Facilities x Interconnection Facilities Cost

*Appendix X to the Transmission Owner Tariff is available at the following link: https://www.sce.com/openaccess
** Subject to change based on changes in Customer-Financed Monthly Rate

Actual SCE Interconnection Facilities Charge:

Effective Date	SCE-Financed Monthly Rate	SCE Interconnection Facilities Cost	SCE Interconnection Facilities Charge Based on Actual Cost
	See Section 4.1 of Appendix X to the Transmission Owner Tariff*	$xxxxxx.xx	Customer-Financed Monthly Rate for Non-ISO-Controlled Facilities x Interconnection Facilities Cost

*Appendix X to the Transmission Owner Tariff is available at the following link: https://www.sce.com/openaccess

INTERCONNECTION FACILITIES AGREEMENT BETWEEN THE CITY OF RIVERSIDE AND SOUTHERN CALIFORNIA EDISON COMPANY

Exhibit C
Engineering And Construction Payment Schedule

1. Existing Payment Schedule

Payment No.	Cost of ISO Controlled Facilities	SCE Interconnection Facilities Cost	SCE Interconnection Facilities One-Time Cost	ITCC	Project Payment (Total Quarterly Payment)	Payment Due Date	Project Payment (Total Quarterly Payment)	Payment Received Date
	(A)	(B)	(C)	24% ITCC Rate (D=B x 24%)	Due (E = A+B+C+D)		Paid	
1	$255,000.00	$0.00	$0.00	$0.00	$255,000.00	4/21/2006	$255,000.00[1]	6/15/2008
2	$255,000.00	$0.00	$0.00	$0.00	$255,000.00	7/21/2006	$255,000.00[1]	6/15/2008
3	$255,000.00	$0.00	$0.00	$0.00	$255,000.00	10/21/2006	$255,000.00[1]	6/15/2008
4	$255,000.00	$0.00	$0.00	$0.00	$255,000.00	1/22/2007	$255,000.00[1]	6/15/2008
5	$255,000.00	$0.00	$0.00	$0.00	$255,000.00	4/23/2007	$255,000.00[1]	6/15/2008
6	$255,000.00	$0.00	$0.00	$0.00	$255,000.00	7/23/2007	$255,000.00[1]	6/15/2008
7	$255,000.00	$0.00	$0.00	$0.00	$255,000.00	10/21/2007	$255,000.00[1]	6/15/2008
8	$255,000.00	$0.00	$0.00	$0.00	$255,000.00	1/21/2008	$255,000.00[1]	6/15/2008
9	$255,000.00	$0.00	$0.00	$0.00	$255,000.00	4/23/2008	$255,000.00[1]	6/15/2008
10	$255,000.00	$0.00	$0.00	$0.00	$255,000.00	7/21/2008	$255,000.00[1]	7/24/2008
11	$345,000.00	$0.00	$0.00	$0.00	$345,000.00	12/24/2009	$345,000.00[2]	12/29/2009
12	$750,000.00	$0.00	$0.00	$0.00	$750,000.00	8/1/2010	$750,000.00[2]	8/27/2010
13	$150,000.00	$0.00	$0.00	$0.00	$150,000.00	1/1/2012	$150,000.00[2]	1/5/2012
14	$300,000.00	$0.00	$0.00	$0.00	$300,000.00	4/1/2012	$300,000.00[2]	4/3/2012
15	$680,000.00	$0.00	$0.00	$0.00	$680,000.00	7/1/2012	$680,000.00[2]	6/30/2012
16	$680,000.00	$0.00	$0.00	$0.00	$680,000.00	10/1/2012	$680,000.00[2]	10/12/2012
17	$680,000.00	$0.00	$0.00	$0.00	$680,000.00	1/1/2013	$680,000.00[2]	1/9/2013
18	$330,000.00	$0.00	$0.00	$0.00	$330,000.00	4/1/2013	$330,000.00[2]	3/31/2013
19	$330,000.00	$0.00	$0.00	$0.00	$330,000.00	7/1/2013	$330,000.00[2]	6/26/2013
20	$330,000.00	$0.00	$0.00	$0.00	$330,000.00	10/1/2013	$330,000.00[2]	9/30/2013
21	$330,000.00	$0.00	$0.00	$0.00	$330,000.00	1/1/2014	$330,000.00[2]	12/23/2013
22	$330,000.00	$0.00	$0.00	$0.00	$330,000.00	4/1/2014	$330,000.00[2]	3/25/2014
23	$330,000.00	$0.00	$0.00	$0.00	$330,000.00	7/1/2014	$330,000.00[2]	6/24/2014

24	$330,000.00	$0.00	$0.00	$0.00	$330,000.00	10/1/2014	$330,000.00[2]	10/6/2014
25	$375,000.00	$0.00	$0.00	$0.00	$375,000.00	1/1/2015	$375,000.00[2]	2/3/2015
26	$1,500,000.00	$0.00	$0.00	$0.00	$1,500,000.00	4/1/2018	$1,500,000.00[3]	4/11/2018
27	$2,000,000.00	$0.00	$0.00	$0.00	$2,000,000.00	1/1/2019	$2,000,000.00	2/26/2019
28	$2,000,000.00	$0.00	$0.00	$0.00	$2,000,000.00	4/1/2019	$2,000,000.00	4/1/2019
29	$1,119,000.00	$0.00	$0.00	$0.00	$1,119,000.00	7/1/2019	$1,119,000.00	7/1/2019
Subtotals	$15,439,000.00	$0.00	$0.00	$0.00	$15,439,000.00		$15,439,000,00	
Totals	$15,439,000.00	$010,597,912.00	$02,794,000.00	$02,543,498.88	$31,374,410.88			

All Costs are in Nominal Dollars

[1]: Payments received pursuant to the Letter Agreement.
[2]: Payments received pursuant to the First Amendment.
[3]: Payments received pursuant to the Second Amendment.
4:

[5]: Payments due for SCE Interconnection Facilities following estimated CPCN approval date. By agreement of the parties, due to a pause in construction, payments 30-44 were not made.
[6]: SCE and RPU will work cooperatively to reconcile the ITCC stated herein, with the ITCC calculations as specified in Sections 14.8.1 and 14.8.2 of the Agreement.

2. New Payment Schedule for 4th Amendment

Payment No.	Cost of ISO Controlled Facilities	SCE Interconnection Facilities Cost	SCE Interconnection Facilities One-Time Cost	ITCC	Project Payment (Total Quarterly Payment)	Payment Due Date	Payment Received Date
1	$15,622,522	$225,873	$16,097	$54,210	$296,180	7/1/2026	
2	$27,237,581	$393,800	$28,064	$94,512	$516,376	10/1/2026	
3	$45,431,451	$656,851	$46,809	$157,644	$861,304	1/1/2027	
4	$70,457,906	$1,018,683	$72,596	$244,484	$1,335,763	4/1/2076	
5	$97,815,547	$1,414,221	$100,783	$339,413	$1,854,417	7/1/2027	
6	$116,805,622	$1,688,780	$120,349	$405,307	$2,214,436	10/1/2027	
7	$116,805,622	$1,688,780	$120,349	$405,307	$2,214,436	1/1/2028	
8	$97,815,547	$1,414,221	$100,783	$339,413	$1,854,417	4/1/2027	
9	$70,457,906	$1,018,683	$72,596	$244,484	$1,335,763	7/1/2028	
10	$45,431,451	$656,851	$46,809	$157,644	$861,304	10/1/2028	
11	$27,237,581	$393,800	$28,064	$94,512	$516,376	1/1/2029	
12	$15,622,532	$225,872	$16,096	$54,209	$296,177	4/1/2029	
13	$3,498,732	$50,585	$3,605	$12,140	$66,330	7/1/2029	
Total	**$750,240,000**[3]	**$10,847,000**	**$773,000**	**$2,603,280**	**$14,223,280**		

[3] Under Section 14.4.2 of this IFA, Riverside is no longer required to make payments for ISO Controlled Facilities.

INTERCONNECTION FACILITIES AGREEMENT BETWEEN
THE CITY OF RIVERSIDE
AND
SOUTHERN CALIFORNIA EDISON COMPANY

Exhibit D
Wildlife Substation One-Line
Diagram

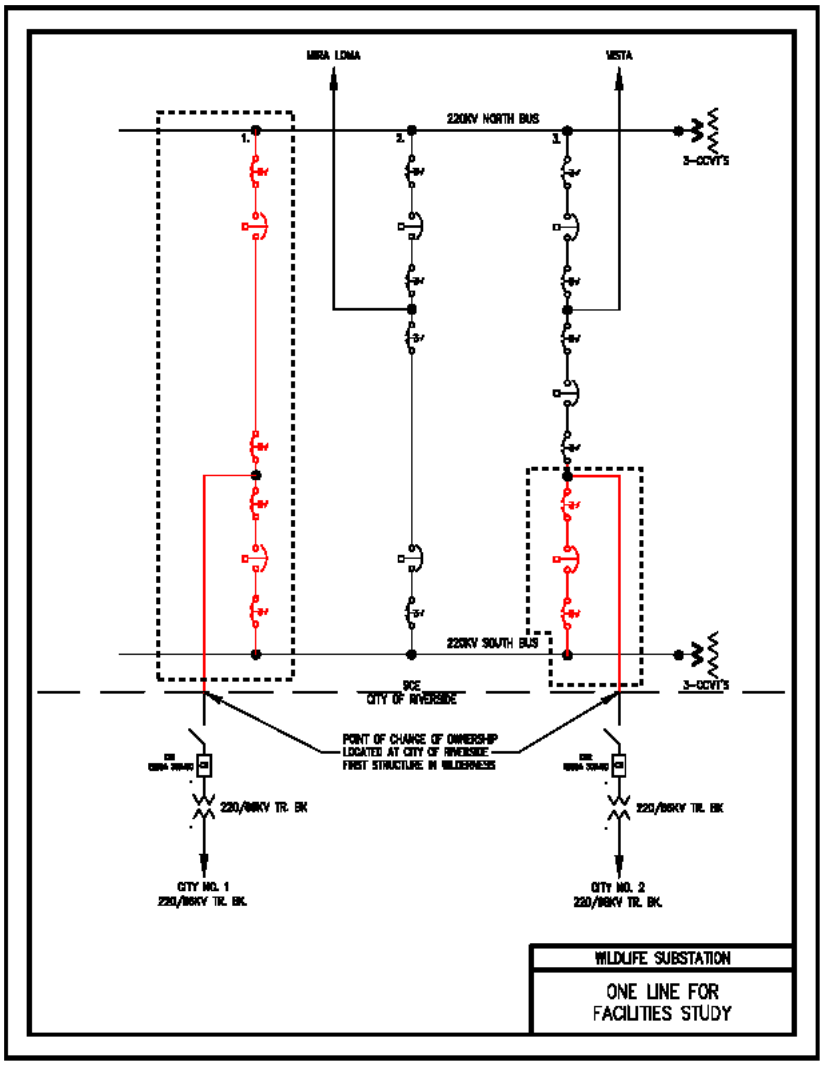

INTERCONNECTION FACILITIES AGREEMENT BETWEEN THE CITY OF RIVERSIDE AND SOUTHERN CALIFORNIA EDISON COMPANY
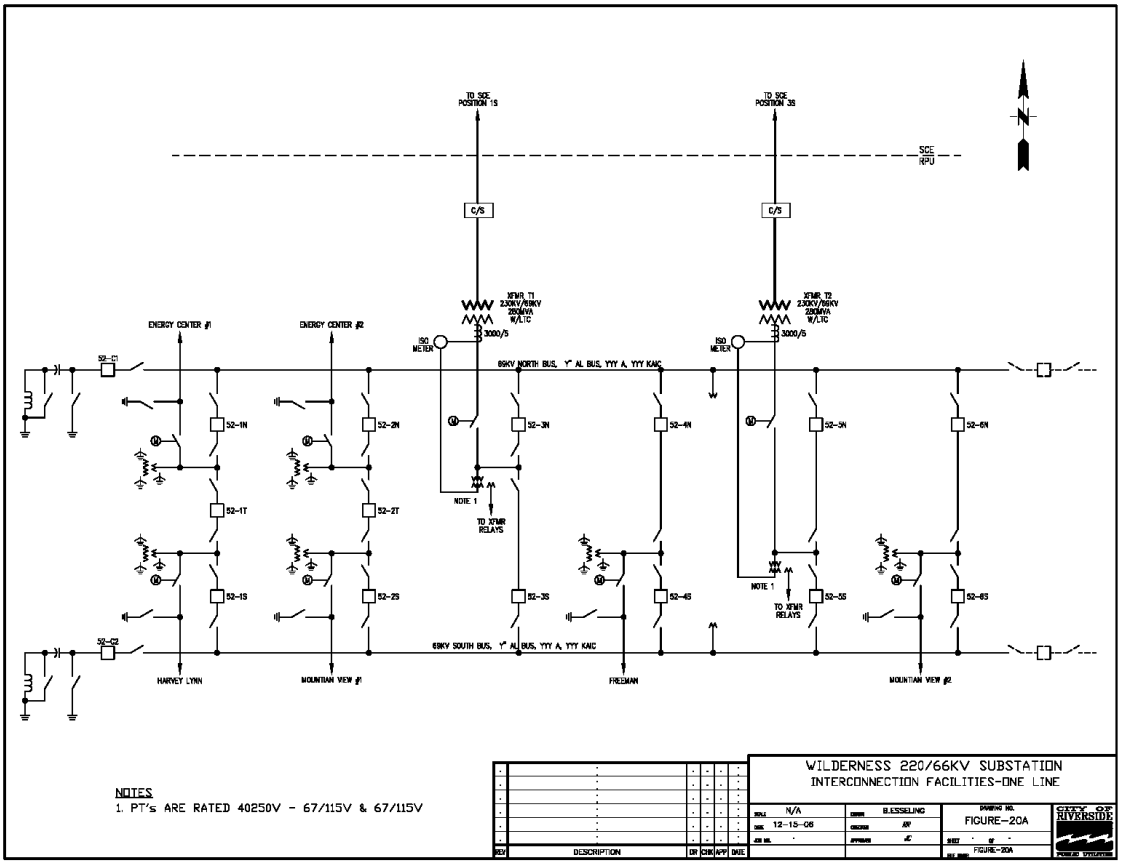
Exhibit E
Riverside Wilderness Substation One-Line Diagram